# DEVELOPING TEST PROCEDURE AND DESIGN OF FIXTURE FOR DYNAMIC TEST OF ROAD AMBULANCES

A THESIS SUBMITTED TO
THE GRADUATE SCHOOL OF NATURAL AND APPLIED SCIENCES
OF
MIDDLE EAST TECHNICAL UNIVERSITY

BY

SİNAN KAYA

IN PARTIAL FULFILLMENT OF THE REQUIREMENTS
FOR
THE DEGREE OF MASTER OF SCIENCE
IN
MECHANICAL ENGINEERING

SEPTEMBER 2019

Approval of the thesis:

# DEVELOPING TEST PROCEDURE AND DESIGN OF FIXTURE FOR DYNAMIC TEST OF ROAD AMBULANCES

submitted by **SİNAN KAYA** in partial fulfillment of the requirements for the degree of **Master of Science in Mechanical Engineering Department, Middle East Technical University** by,

Prof. Dr. Halil Kalıpçılar
Dean, Graduate School of **Natural and Applied Sciences**

Prof. Dr. M. A. Sahir Arıkan
Head of Department, **Mechanical Engineering**

Prof. Dr. Mustafa İlhan Gökler
Supervisor, **Mechanical Engineering, METU**

**Examining Committee Members:**

Prof. Dr. Haluk Darendeliler
Mechanical Engineering, METU

Prof. Dr. Mustafa İlhan Gökler
Mechanical Engineering, METU

Prof. Dr. Raif Orhan Yıldırım
Mechanical Engineering, METU

Prof. Dr. Ender Ciğeroğlu
Mechanical Engineering, METU

Prof. Dr. S. Kemal İder
Mechanical Engineering, Çankaya Uni.

Date: 03.09.2019

**I hereby declare that all information in this document has been obtained and presented in accordance with academic rules and ethical conduct. I also declare that, as required by these rules and conduct, I have fully cited and referenced all material and results that are not original to this work.**

Name, Surname: Sinan Kaya

Signature:

# ABSTRACT

## DEVELOPING TEST PROCEDURE AND DESIGN OF FIXTURE FOR DYNAMIC TEST OF ROAD AMBULANCES

Kaya, Sinan
Master of Science, Mechanical Engineering
Supervisor: Prof. Dr. Mustafa İlhan Gökler

September 2019, 159 pages

The number of traffic accidents involving road ambulances is increasing. This situation increases the risk of death and injury of the patients and healthcare workers transported in the patient transport cabin of the road ambulances. Therefore, providing a safer environment for these occupants has become important. Medical devices, drawers, stretcher systems used in the road ambulances should be secured to avoid endangering safety of the occupants. The conformity of the fixing systems designed for this purpose must be verified by performing the 10 g tests of ambulance patient transport cabin in a sled test facility as required by EN 1789+A2 standard. The rules described in the standard cause some ambiguities during the evaluation of the test results. In this study, a new test procedure has been proposed in order to prepare the test sample properly, conduct tests and evaluate test results for the road ambulance tests. According to EN 1789+A2 standard, the 10 g tests are performed for five different directions (front, back, left, right, vertical). In METU-BILTIR Center Vehicle Safety Unit, the fixtures are used to fasten the test sample (i.e. ambulance cabin) to the sled during the tests. Dynamic analysis of the test fixture used for vertical direction has been performed by using Finite Element Analysis (FEA) Software Ls-DYNA. The results of FEA and deformations of the currently used test fixture during the tests have been observed and compared. It has been evaluated that the design of the fixture for the vertical direction test should be improved. Two completely new test fixtures and one with modifications on the currently used fixture are designed and FEA for these have been realized. It has been seen that these three alternative test fixtures provide advantages over the currently used fixture by decreasing plastic deformation.

Keywords: Road Ambulance Safety, Dynamic Test, EN 1789, Conformity Assessment, Sled Test Fixture

# ÖZ

## KARAYOLU AMBULANSLARININ DİNAMİK TESTLERİ İÇİN TEST PROSEDÜRÜNÜN GELİŞTİRİLMESİ VE FİKSTÜR TASARIMI

Kaya, Sinan
Yüksek Lisans, Makina Mühendisliği
Tez Danışmanı: Prof. Dr. Mustafa İlhan Gökler

Eylül 2019, 159 sayfa

Karayolu ambulanslarının karıştığı trafik kaza sayıları artış göstermektedir. Bu durum hasta taşıma kabininde taşınan hastaların ve sağlık çalışanlarının ölüm ve yaralanma risklerini arttırmaktadır. Bu nedenle, yolcular için daha güvenli bir ortam sağlanması önemli hale gelmiştir. Karayolu ambulanslarında kullanılan tıbbi cihazlar, çekmeceler, sedye sistemleri yolcuların güvenliğini tehlikeye atmayacak şekilde tutturulmalıdır. Bu amaç için tasarlanan sabitleme sistemlerinin uygunluğu, EN 1789+A2 standardının gerektirdiği şekilde, ambulans hasta taşıma kabinlerinin 10 g dinamik sled testlerinin gerçekleştirilmesi vasıtası ile doğrulanmalıdır. Bu standartta belirtilen kurallar test sonuçlarının değerlendirilmesi sırasında bazı belirsizlikler yaratmaktadır. Bu çalışmada, test numune hazırlığının uygun şekilde yapılabilmesi, testlerin gerçekleştirilmesi ve test sonuçlarının değerlendirilebilmesi için yeni bir test prosedürü önerilmiştir. EN 1789+A2 standardına göre farklı yönlerden (ön, arka, sol, sağ ve dikey) 10 g testleri gerçekleştirilmektedir. Dinamik testlerin yapılması sırasında test numunesinin slede bağlanabilmesi için METU-BİLTİR Merkezi Araç Güvenlik Birimi'nde fikstürler kullanılmaktadır. Dikey yönde kullanılan test fikstürün dinamik analiz çalışmaları Sonlu Elemanlar Analizi (SEA) programı Ls-DYNA kullanılarak gerçekleştirilmiştir. Analiz sonuçları ve mevcut kullanılan fikstürün test sırasında deformasyonu gözlemlenerek sonuçlar karşılaştırılmıştır. Dikey yön testi için fikstür tasarımının iyileştirilmesi gerektiği değerlendirilmiştir. Tamamen yeni iki test fikstürü ve şu anda kullanılan fikstür üzerinde modifiye edilmiş bir tane test fikstürü tasarlanmış ve SEA gerçekleştirilmiştir. Bu üç alternatif test fikstürünün plastik deformasyonu düşürerek şu anda kullanılan fikstür üzerinde avantajlar sağladığı görülmüştür.

Anahtar Kelimeler: Karayolu Ambulans Güvenliği, Dinamik Test, EN 1789, Uygunluk Değerlendirme, Kızaklı Test Fikstürü

To My Wife and My Son

# ACKNOWLEDGEMENTS

I would like to express my deepest gratitude to my supervisor Prof. Dr. Mustafa İlhan Gökler for his guidance, assistance, encouragements, insight, and patience throughout this study.

Special thanks go to my colleagues Sevgi Saraç Karadeniz, Cumhur Harçcı, Yeşim Dildar for their valuable assistance and encouragement.

I would like to thank METU-BILTIR Center Vehicle Safety Unit for the tests performed during the experimental study.

I would like to thank Mr. Mehmet Güvenç and EMS Mobile Systems Company for providing me valuable information and guidance.

Finally, I owe my deepest gratitude to my wife Buket Kaya and my son Alp Tuğra Kaya for their endless support during my studies.

# TABLE OF CONTENTS

CHAPTERS

APPENDICES

# LIST OF TABLES

TABLES

# LIST OF FIGURES

FIGURES

# LIST OF ABBREVIATIONS

ABBREVIATIONS

| | | |
|---|---|---|
| ATD | : | Anthropomorphic Test Devices |
| CAD | : | Computer-Aided Design |
| CAE | : | Computer-Aided Engineering |
| CFC | : | Channel Frequency Classes |
| CNRB | : | Constrained Nodal Rigid Body |
| CSS | : | Crash Simulations Systems |
| EMS | : | Emergency Medical Services |
| EN | : | European Standard |
| FEA | : | Finite Element Analysis |
| FMVSS | : | Federal Motor Vehicle Safety Standard |
| GSA | : | General Service Administration |
| GVS | : | Ground Vehicle Standard |
| HIC | : | Head Injury Criterion |
| MDF | : | Medium Density Fiberboard |
| NFPA | : | National Fire Protection Association |
| NHTSA | : | The National Highway Traffic Safety Administration |
| PMHS | : | Post-Mortem Human Subject |
| R&D | : | Research And Development |
| SAE | : | Society of Automotive Engineers |
| SID | : | Side Impact Dummy (SID) |
| TSE | : | Turkish Standards Institution |

# LIST OF SYMBOLS

SYMBOLS

**Latin Letters:**

$C$ : Damping matrix

c : Speed of sound in the material

$E$ : Elastic modulus

$m$ : Mass

$M$ : Mass matrix

$R_{int}$ : Internal force vector

$R_{ext}$ : External force vector

$U$ : Nodal displacement vector

$\dot{U}$ : Nodal velocity vector

$\ddot{U}$ : Nodal acceleration vector

$V$ : Volume

**Greek Letters:**

$\Delta t$ : Time step size

$\Delta v$ : Velocity change

$\dot{\varepsilon}$ : Strain rate

$\rho$ : Density

$\sigma_y$ : Yield stress

$v$ : Poisson ratio

$\omega$ : Natural frequency

# CHAPTER 1

# INTRODUCTION

## 1.1. Effects of Traffic Accidents on Road Ambulances

Today, emergency health services are supplied with widespread, specially equipped land, sea, and air ambulance systems in Turkey [1]. Road medical ambulance transportation plays one of the vital roles in emergency health services. The growing demand for the emergency health care system automatically triggers an increased number of ambulance vehicles in traffic. According to the 2017 Health Statistics Yearbook, which was published by the Republic of Turkey Ministry of Health, the total number of ambulance vehicles is almost doubled (from 2.963 to 5.760) in the last fifteen years [2]. As a result of the increasing number of ambulance vehicles, ambulance accidents have occurred more frequently and have been considered more seriously in the Emergency Health Care System. For instance, the frequency of ambulance accidents increased by 42.5% between 2009-2013 and 1886 ambulance accidents happened and resulted in 1857 injuries and 55 fatalities during that same five-year period in Turkey [3]. Furthermore, approximately 135 ambulance staff passed away due to ambulance accidents between 2002-2013. While the probability of death of ambulance staff in an ambulance crash in Turkey is 21.4/100.000, this figure is considerably beyond what was reported in the USA (9.6/100.000) [3]. The National Highway Traffic Safety Administration (NHTSA) estimates that an average of 4500 vehicle crashes involving ambulances occurs yearly [4]. Over speed and time pressure are the first and foremost causes of ambulance accidents. Ambulance staff, patients, and other passengers are at high risk in terms of fatal injury or even die during accidents involving ambulances. According to researches, occupants traveling in the rear patient compartment of the ambulance are injured more frequently and die more frequently [5]. National Highway Traffic Safety Administration (NHTSA) collected ambulance accident data from 1992-2011, and it revealed that 17% of drivers and 29% ambulance passengers were injured; on the other hand, 4% of drivers and 21% ambulance passengers died in the ambulance accidents in the USA [4]. Different factors that contribute to raising injury and the fatality rate are summarized in the following section.

Figure 1.1. The scene after the accident [6]

## 1.2. Safety of Medical Ambulance Vehicle

When other passenger vehicles and medical road ambulance vehicles are compared, ambulances are uncommon vehicles due to their weights, sizes, different designs, and usage. Besides, ambulance vehicle types are quite varied such as vans, light, and heavy trucks. Also, passengers can be transported in various positions and orientations, comprising patients on stretcher and usually unrestraint medical staff in the rear compartment of the medical ambulances. The typical ambulance patient compartment is shown in Figure 1.2.

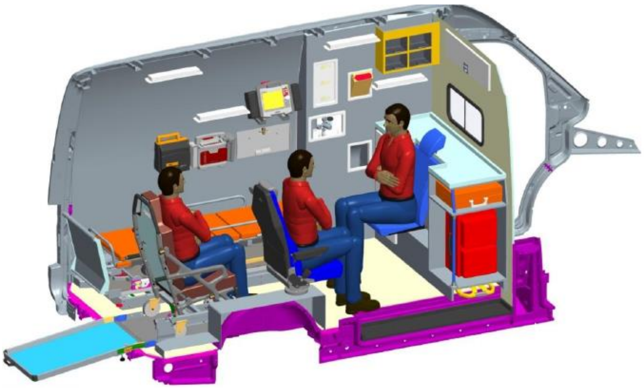

Figure 1.2. Ambulance rear patient compartment [7]

Three main categories cause deaths or severe injuries of ambulance staff or patients who are transported with ambulances. These three main categories are listed below [8]:

1. The inherent risks of driving/riding ambulance vehicle
    a. Driving with lights-and-siren
    b. Dangerous driving
        i. Too fast
        ii. Against traffic
    c. Lack of ambulance worker's situational awareness
    d. Lack of public awareness and recognition of ambulance
2. Insufficient ambulance safety standard and design
    a. Rear compartment environment
        i. Unsecured equipment
        ii. The projectile potential of unsecured equipment
        iii. Sharp corners/edges of interior surfaces
        iv. Side-facing seats
        v. Large compartment size
        vi. Equipment inaccessibility
    b. Lack of crashworthiness standards
    c. Insufficient crashworthiness testing
    d. Vehicle retrofitted
    e. Inadequate seat-belt design
3. Vulnerability to injury in the rear patient compartment of moving the ambulance
    a. Standing occupants
    b. Lack of restraint during transportation
    c. Hands Occupied
    d. Lack of head protection
    e. Lack of restraint capability

When considering the second category, there is no doubt that insufficient ambulance safety standards and design may contribute to high transportation injury and fatality rates for ambulance vehicles.

Especially the rear compartment of an ambulance can be very dangerous because it contains non-crash-proof structure, sharp corner edges, risky surfaces, projectiles, dangerous head strike zones and poor interior design [8]. Basically, internal devices such as; cabinets, seats, flooring/anchoring devices, medical devices, stretcher and stretcher support, medical bags, accessories, patient luggage, bins, personal items, fire extinguisher, oxygen tanks, etc. can be considered as potential threats during impact or crash circumstances [9]. The other significant issue about the rear compartment environment is unsecured equipment which causes sharp corners/edges as well as risk for projectile effect. Cracking material, traveling items, all loose or not improperly fixed items can cause most severe and fatal injuries.

It seems that patient deaths or severe injuries happened at a high rate within risky ambulance patient compartment and are linked with low usage ratio of restraint system; inappropriately restrained patients and equipment; head impact hazards; structural inadequacies within the frame of the compartment in the ambulance [10].

Although road ambulances are related to higher crash fatality and injury rates, they are mostly exempt from the automotive industry crashworthiness and safety standards or regulations [11]. Furthermore, the expertise that has been gained in the automotive industry has not yet been fully transferred to the safety of ambulance vehicles. The other inadequacy is that there has been a limited study in terms of crashworthiness and passenger protection performance of ambulance vehicles [12].

Then, the main questions emerge as to how safe these vehicles are and according to which standards they are designed, tested, and evaluated. In order to recognize medical road ambulance generally, their classification, characteristics, and safety requirements are explained in the following section.

### 1.3. Road Ambulances, Classification and Testing

There are three main categories of medical ambulances, which are land, sea, and air ambulance systems, as shown in Figure 1.3. EN 1789+A2 standard defines land ambulances as “the ambulance is a vehicle or craft intended to be crewed by a minimum of two appropriately trained staff for the provision of care and transport of at least one stretchered patient” [13]. According to the intended use of ambulances, there are three different types of road ambulances [13], which are:

- Type A- Patient Transport Ambulance: Road Ambulances which are produced and hardwared for transportation of nonemergency patients
  - Type A1: only one patient can be transported
  - Type A2: one or more patient(s) can be transported
- Type B- Emergency Ambulance: Road Ambulances which are produced and hardwared to necessary treatment and monitoring of patients
- Type C- Specially Equipped: Road Ambulances which are produced and hardwared for extensive treatment and monitoring of patients

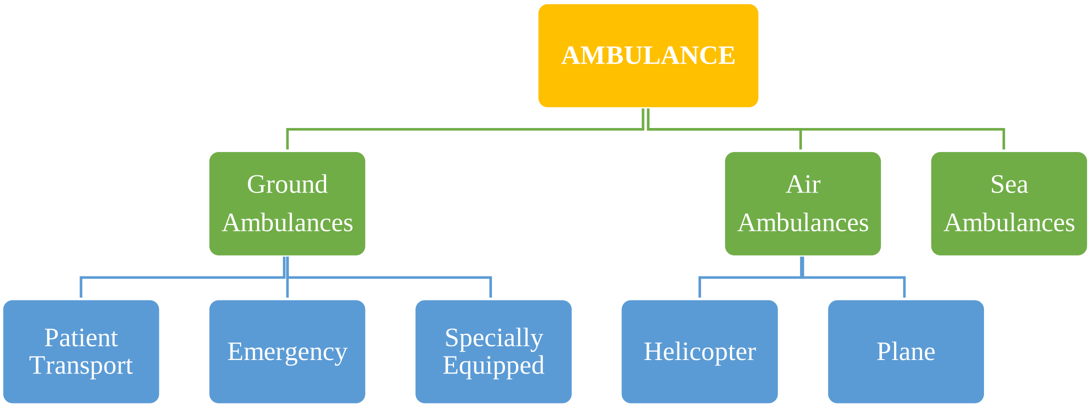

Figure 1.3. Ambulance vehicle classification

The integrated body shell-type ambulances, which are under the classification of van-based ambulances, are the most commonly preferred body types in Turkey. The integrated body shell-type ambulance is shown in Figure 1.4.

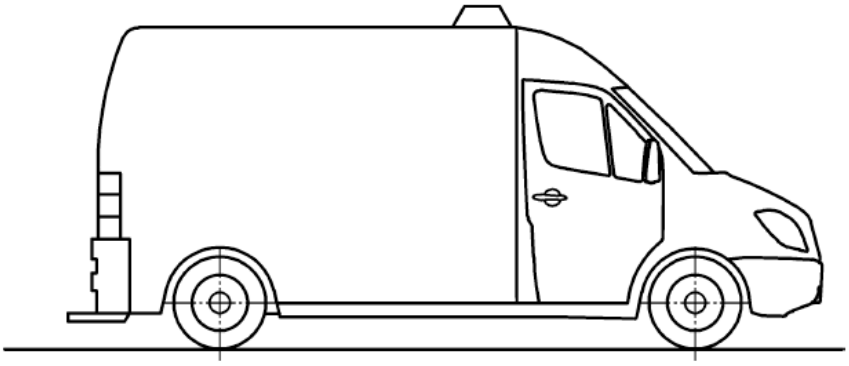

Figure 1.4. Integrated body shell-type ambulance [13]

Currently, road ambulances are designed and built by aftermarket ambulance retrofitters/manufacturers in Turkey. These unique vehicles are modified from a standard chassis, including two separated sections, the front section is almost the same as other vehicles, yet rear compartment section is entirely different from other road vehicles. There are several different types of vehicles such as Ford Transit, Mercedes-Benz Sprinter, Volkswagen Crafter, Volkswagen Transporter, Hyundai H350, Fiat Ducato which are the most commonly used brands by the aftermarket ambulance manufacturers in Turkey.

Due to the different structures of ambulance vehicles, proper conformity assessment of the ambulance rear patient compartment is crucial in order to mitigate severe injury risk and fatality during crash events. EN 1789 + A2 standard specifies the requirement for the design, testing, performance and equipping of road ambulances and it includes requirements for the patient’s compartment; moreover, it is mandatory standard for ambulance manufacturer in accordance with the Regulation in Turkey. Alongside other requirements about safety, this standard proposes a dynamic test under five axes (±x, ±y, +z) to verify the strength of mounting and fixation systems of the ambulance patient compartment. According to the proposed dynamic test, test sample shall be accelerated/decelerated in the longitudinal, transverse, and vertical directions [13]. The main purpose of this test is to verify the safety performance of the retrofit modifications of the rear patient compartment rather than a test for the crashworthiness performance and safety of the vehicle as a whole. All parts of the rear patient compartment should be subjected to gravitation and the acceleration pulse caused by the impact. The corridor for acceleration pulse acting on the rear compartment is shown in Figure 1.5.

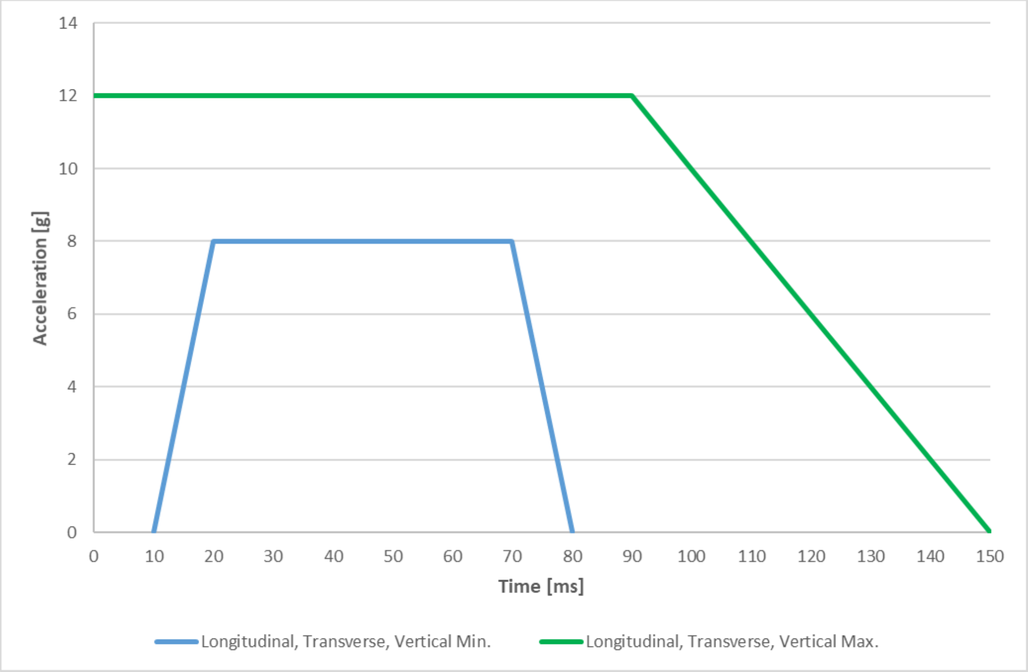

Figure 1.5. Acceleration pulse corridor [13]

### 1.4. Scope of the Thesis

As discussed in the previous sections, conformity assessment of road ambulances seems as a significant, complex and multidisciplinary area. In order to identify the unclear issues and challenges of ambulance conformity assessment, personal communications are conducted with related parties such as METU-BILTIR Center Vehicle Safety Unit Test Engineers, EMS Mobil Sistemler A.Ş (Ambulance Manufacturer), related departments of Turkish Standards Institution (TSE), representatives of the Rescue Systems Technical Committee (CEN/TC 239). Also, personal communication is conducted with the National Institute for Occupational Safety and Health (NIOSH) safety engineer to identify best practices for ambulance conformity assessment in other countries.

In the light of literature survey and communications with the above-stated parties, it seems that key elements of conformity assessment such as authorization, the mandatory standard for testing and implementation are well defined by the Ambulances, Emergency Health Care Vehicle, and Ambulance Services Regulation for road ambulance vehicles in Turkey. Especially after using this regulation, there has been made significant progress for safer road ambulances. However, it is realized the main problems that arise from the mandatory standard (EN 1789 + A2), which is referred in this regulation. Especially insufficient and unclear dynamic test requirements of the standard in terms of sample preparation, fastening of the test sample to sled test platform, testing procedure, evaluation criteria of the dynamic test result make proper conformity evaluations difficult.

For these reasons, the main intention behind this study is to develop and implement a new test procedure, which includes sample preparation, test process, post-test inspection and evaluation of test results. Besides, the published safety/crashworthiness standards and limited safety and crashworthiness researches for ambulances are reviewed to discuss undefined topics or missing issues about occupant safety. It is also intended to observe and analyze the currently used test fixture, which is used to fasten the bulky, heavy, non-uniform fully-equipped ambulance patient compartment to the sled in the most difficult accelerating direction (i.e. vertical direction). After analysis results and actual test observations, it is worth to propose new alternative test fixtures. This study has been carried out in cooperation with METU-BILTIR Center Vehicle Safety Unit and Turkish Standards Institution (TSE).

In the second chapter, related studies about dynamic testing of ambulance vehicles, full vehicle crash testing and their results are summarized. The conformity assessment structure of ambulance vehicles in Turkey is presented. The comparison between various ambulance safety standards and regulations are expressed. METU-BILTIR Center Vehicle Safety Unit test facility is introduced for dynamic testing in this chapter.

In the third chapter, the proposed test procedure, which includes sample preparation, test process, post-test inspection, and evaluation of test result is presented.

In the fourth chapter, geometrical modeling of the current test fixture which is used for the vertical test setup, is presented.

In the fifth chapter, the finite element model of the currently used test fixture is presented.

In the sixth chapter, observations of the sled tests performed in METU- BILTIR Center Vehicle Safety Unit are presented.

In the seventh chapter, three alternative test fixtures are presented and the finite element analyses are carried out for these, and the results are presented.

In the eighth chapter, the clamping method is presented to ease fixing the test sample to the sled.

In the last chapter, the conclusions and proposed future works are presented.

# CHAPTER 2

# STUDIES AND STANDARDS FOR ROAD AMBULANCE SAFETY

## 2.1. Safety Studies

On the contrary to extensive R&D activities concentrated to occupant protection in the passenger cars by both carmakers industry and automotive safety authorities in the world, occupant safety of road ambulances, especially for the rear patient compartment, has not been considered by the automotive safety perspective up to recently [12]. As a result, there are limited studies on the crashworthiness point of view and the biomechanics of occupant safety in the ambulance environment in the literature. These studies have been reviewed and summarized below.

Marc Fournier et al. conducted studies to evaluate specially equipped ambulance in terms of vehicle design and personnel behavior during transport. They also examined potential trauma of patient and ambulance workers in the rear compartment by executing one side pole impact test in a test sled with two anthropomorphic test dummies (ATDs) and a post mortem human subject (PMHS), as shown in Figure 2.1. The crash test was performed at 50 km/h (30mph) with the standard barrier equipped with a pole and projected horizontally against the left side of the vehicle. According to the test result, they stated that the medical equipment behaves like a projectile when the sled test applies. The resultant acceleration of the PMHS head was measured 25 km/h at 40 ms after impact, and severe head acceleration occurred in 150 ms because of head impact on the sharp corner of the storage compartment, as shown in Figure 2.2. They highlighted the risk of chest, abdominal, head trauma for dummies which were placed perpendicular to the road in squad bench. They suggested that seatbelts should be used during the transportation of EMS personnel and the patient in the rear compartment. Due to the risk of expulsion and hitting against the sharp corners of a storage compartment, the vacuum stretcher should also be used for the restraining of the patient and seatbacks should be placed in the same direction to the road secured by seat belts anchored in three points [14].

Figure 2.1. Interior of test vehicle [14]

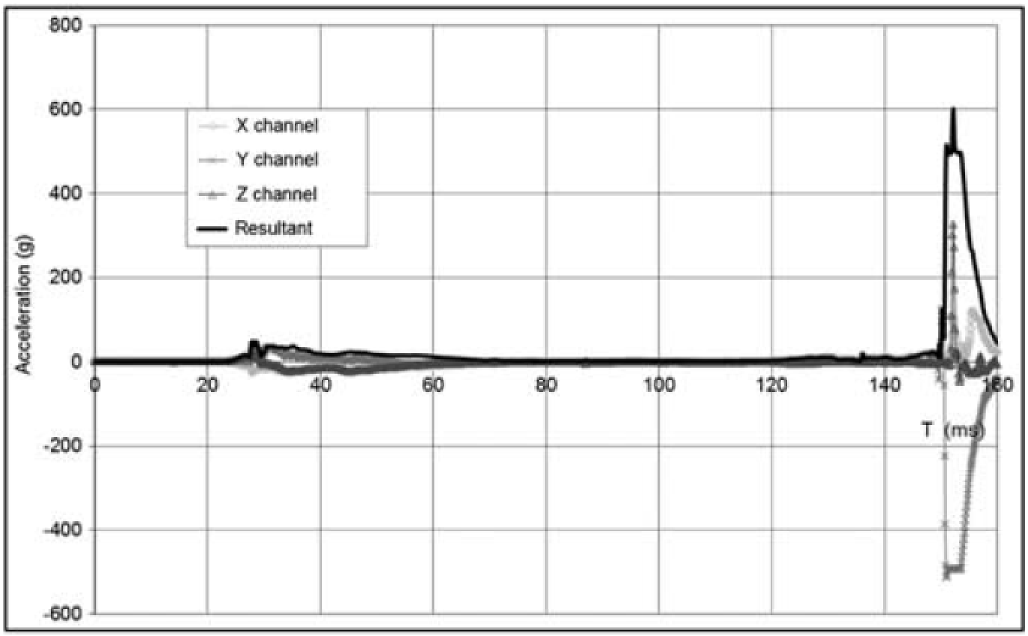

Figure 2.2. Acceleration of the PMHS head [14]

Nadine Robyn Levick et al. conducted vehicle to vehicle intersection crash tests in order to show safety and crashworthiness of ambulance vehicles by observing crash dynamics of the vehicle and its occupants. They used two different crash configurations. The first one was 46 mph traveling Type II ambulance vehicle crash to right side forward of the midpoint of stationary Type I ambulance which instrumented ATDs are positioned. The second one was 36 mph traveling Type III ambulance which instrumented ATDs are positioned impact a stationary Type II vehicle on the left side. During the crash, the restrained child ATD was subjected to a head and neck impact from an unrestrained ATD, as shown in Figure 2.3. They stated that insufficient restraint system, unrestrained staff, risky interior design, and contact surfaces could cause life-threatening safety hazards, even impact acceleration is in the survivable limit. They suggested that safety standards should be developed urgently in order to improve the crash safety performance of Ambulance Vehicles [15].

Figure 2.3. Vehicle interior after the first crash test [15]

Nadine Levick, Guohua Li, John Yannaccone executed accelerator HYGE sled test in ambulance rear cabin environment to obtain knowledge about occupant’s kinematics and forces generated under ambulance frontal crash circumstances with the target sled pulse 26 G and the maximum velocity of 30 mph. The instrumented three-year-old Hybrid-III ATD, the instrumented 50th percentile male Side Impact Dummy (SID), two un-instrumented 95th percentile male Hybrid-II ATD are positioned in different positions in rear ambulance cabin. According to test results, the recorded Head Injury Criterion (HIC) value of three-year-old Hybrid-III ATD is 171, which is lower than 1000 as the threshold by Federal Motor Vehicle Safety Standard (FMVSS) 213 [16]. When comparing pre-test and post-test position of 95th percentile male Hybrid-II and three-year-old Hybrid-III ATDs, their restraint system performs well; however, unrestrained SID impacted the front bulkhead cabinet shown in Figure 2.4. They suggested that an effective restraint system should be designed and conveniently tested under impact condition with the validated crush pulses [12].

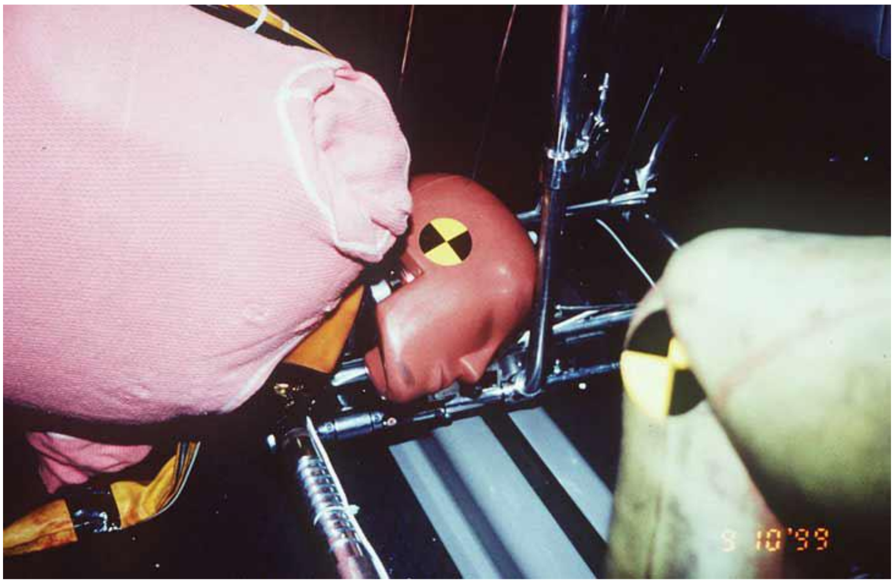

Figure 2.4. SID position after sled test [12]

Nadine Levick and Raphael Grzebieta stated that the purpose of full vehicle tests is to define crash test pulse parameters that could utilize to evaluate the real-world crash dynamic performances of ambulance vehicles and their components in sled testing platform. According to Levick et al. conducted a frontal full vehicle test with 44 mph impact velocity and a resultant velocity change of 18.6 mph. They obtained a sample frontal vehicle crash pulse that has a different profile from both FMVSS 213 [16] and FMVSS 208 [17], as shown in Figure 2.5. The test pulse which derives from real-world intersection scenario (rear box of the bullet vehicle impacting a van ambulance) is compared with the Current et al.'s [18] in Figure 2.6, the crash pulse which derives from the average of all three full barrier tests for the rear box. Nadine Levick and Raphael Grzebieta asserted that loads are distributed across the face of the vehicle during the full barrier concrete wall impact test, so this test gives little information about occupant intrusion frequently observed in real-world crashes. On the other hand, offset the crash barrier test gives more reliable data for real-world frontal impact crashes. They concluded that the test profiles derive from a full rigid barrier vehicle crash test may not correctly represent real-world crash events [19].

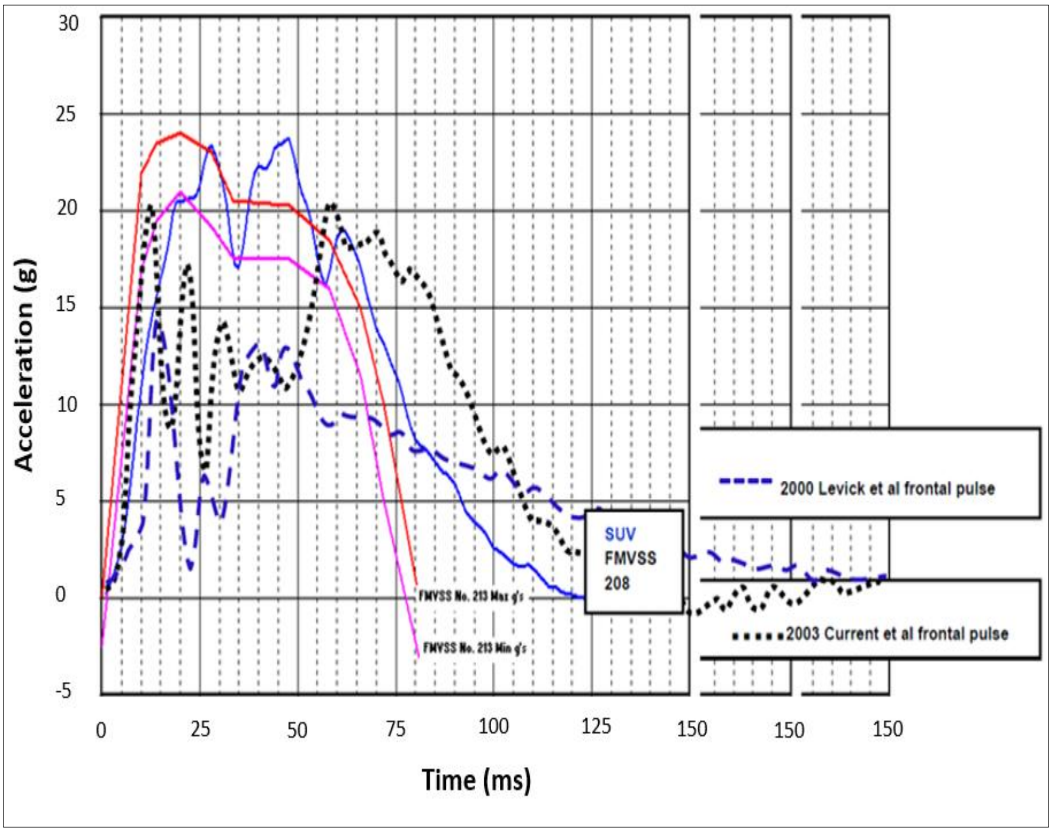

Figure 2.5. Comparison of frontal crash test pulses [19]

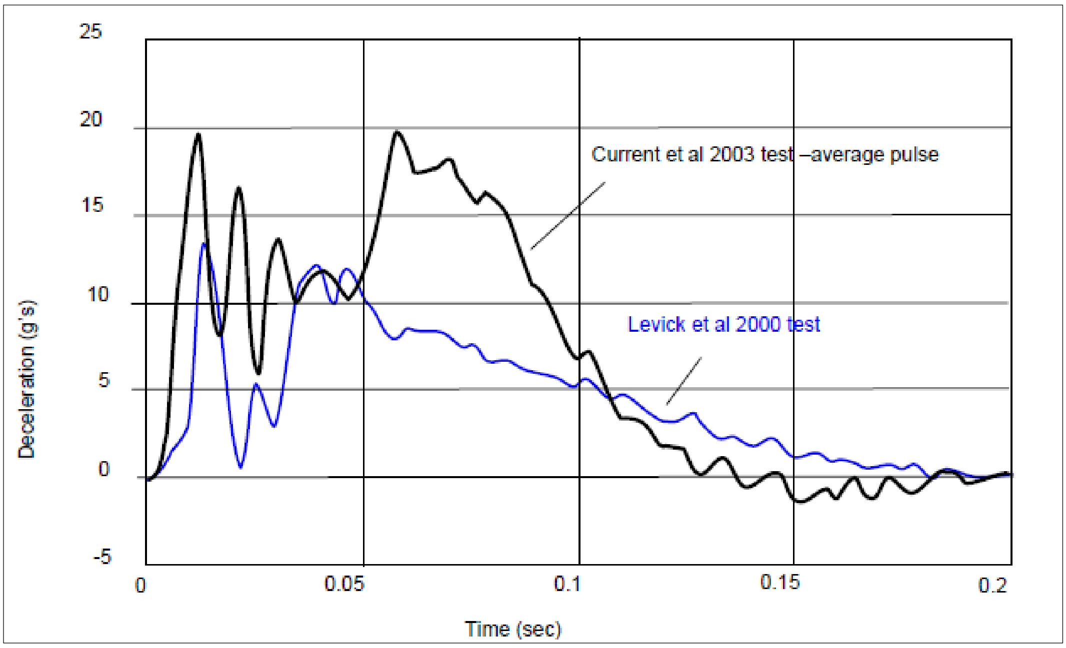

Figure 2.6. Comparison of frontal crash test pulses [19]

Richard S. Current et al. conducted the fixed barrier front impact tests by using the three Type III ambulances (Ford E-350 van chassis) with a targeted impact velocity of 48 kph and vehicle-to-vehicle side impact test by using one Type I ambulance (Ford F-350 truck chassis) in order to focus on vehicle chassis behavior and acceleration pulses in different directions, as shown in Figure 2.7. According to patient compartment acceleration data sets, it reveals that shape, duration, the peak acceleration of pulses are similar for three impact tests, and the resultant peak acceleration of the patient compartment is given in Figure 2.8. During the frontal impact test, acceleration values in the lateral (y-axis) are negligible. However, the remarkable acceleration in the vertical plane (z-axis) occurs due to pitch-up or forward rotation of the patient compartment, as shown in Figure 2.9. Besides, they stated that forward rotation of patient rear cabinet considerable high and ranging up to roughly 16.5 degrees during the frontal impact test. On the other hand, distortion of ambulance chassis and regional deformation near the accelerometers lead to complex crush pulse for side impact. While the front and rear sections remained almost stationary, the center of the ambulance accelerated more rapidly during the initial phase of the side impact. There were also differences between the forward box, and rear box acceleration showed in Figure 2.10. They stated that pulse duration for the side impact was roughly 165-180 milliseconds according to the test data. The researchers suggested that the box interaction, chassis performance, and increased ambulance weight effects and energy management should be considered to protect all occupants in the front and back of Ambulances [18].

Figure 2.7. Fixed barrier front-impact test and side-impact test [18]

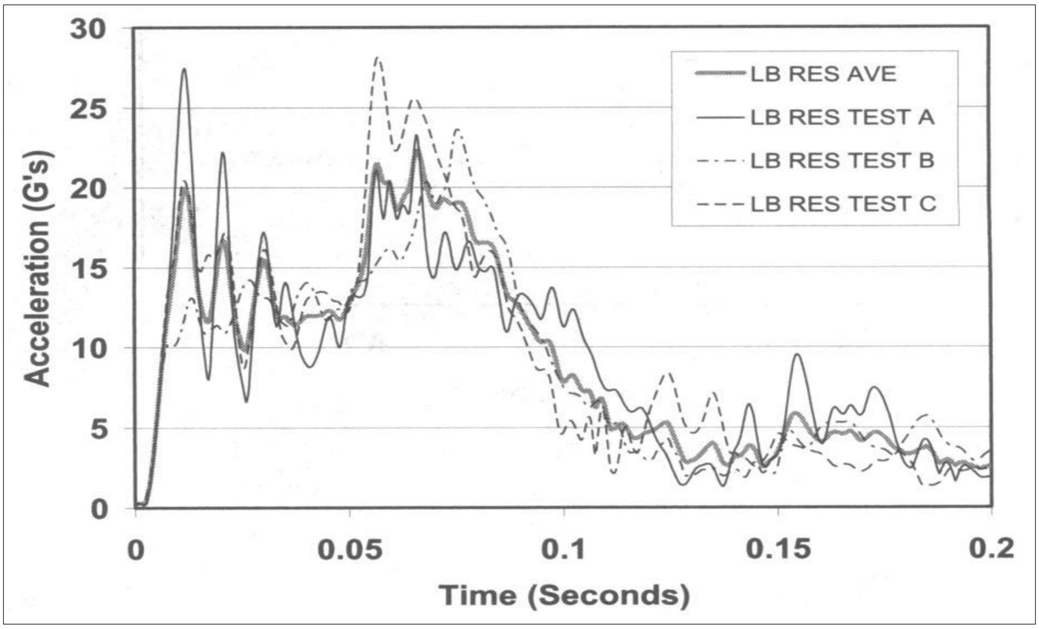

Figure 2.8. Resultant Pulses for all three frontal impact test [18]

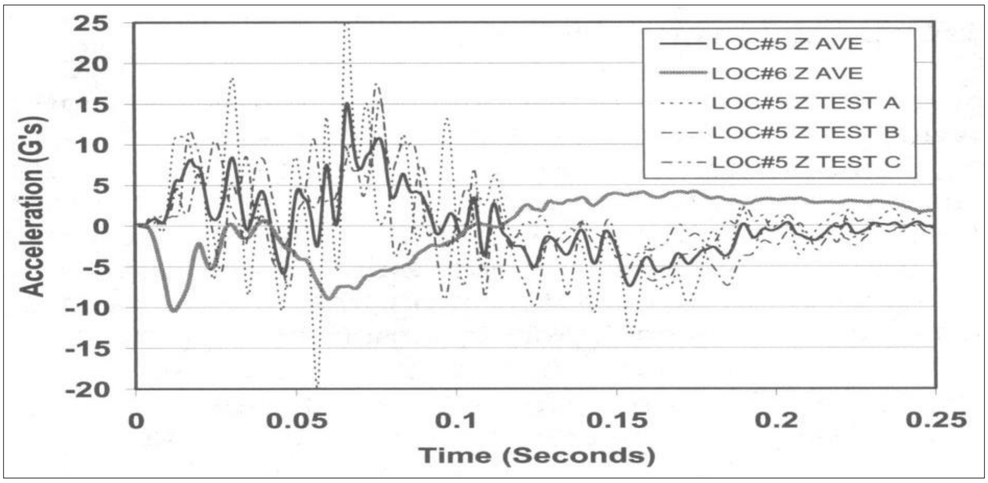

Figure 2.9. Vertical (z-axis) acceleration [18]

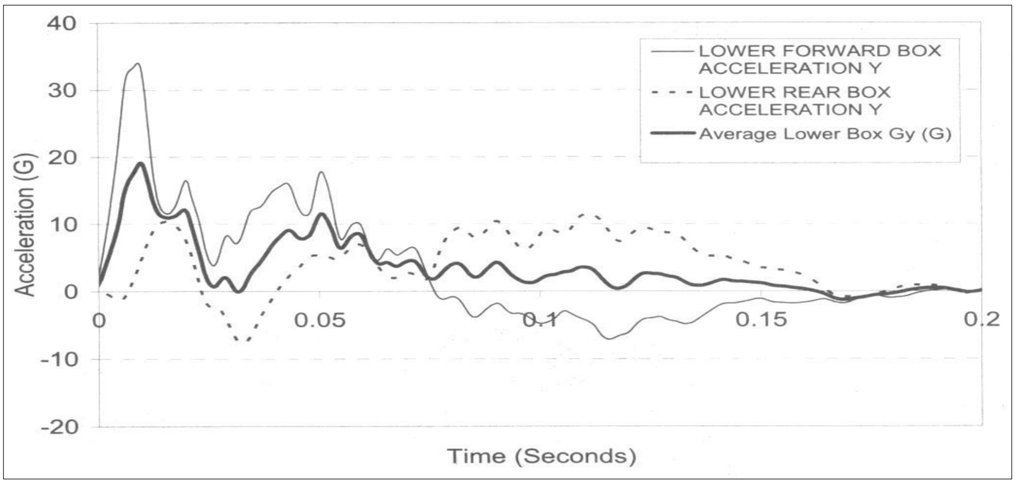

Figure 2.10. Lateral ambulance box acceleration [18]

According to the studies mentioned above, it seems that the rear patient compartment is very dangerous due to unrestrained occupants, inefficient holding and fixation systems, sharp corners, availability of different seating positions, and inadequate design, etc. as summarized in the first chapter. Most of the researchers point out the necessity of more research to understand the biomechanics of occupant in the ambulance environment for real accident situation, in parallel, they emphasize that the proper safety standard and testing are crucial to make the ambulance vehicle safer. The published standards about road ambulance safety are reviewed in the next section.

## 2.2. Regulations and Standards of Road Ambulances

Before the publication of the first national Australian/New Zealand standard AS/NZS 4535 (ambulance restraint systems standard), there were no dynamic safety testing and performance standards for ambulances globally. This standard proposes to conduct 24 G forward and rear and 10 G lateral impact tests with the use of anthropomorphic crash test dummies (ATD) [19]. 10 G forward, rear, lateral, and vertical impact tests conducted during dynamic impact testing with the use of anthropomorphic crash test dummies in EN 1789, which has been implemented since 2000 in Europe. After AS/NZS 4535 and EN 1789 were published, they have been considered as the mandated standards [19]. EN 1789:2007 was prepared by the "European Committee for Standardization (CEN) Technical Committee 239- Rescue Systems" and was approved by CEN in 2007. CEN approved Amendment 1 and Amendment 2 of the standard in 2010 and 2014, respectively. Turkish Standard Institution (TSE) has accepted the last version of European Standard as a Turkish Standard, and it was published as TS EN 1789+A2 in 2014, referred to as "EN standard" or "EN 1789+A2" hereafter. Although the EN standard covers below-listed examinations and tests for road ambulances [13], the first item is studied in this thesis;

- Testing of maintaining systems and fixations of the equipment in the patient's compartment
- Testing of the interior noise level in the patient compartment of the ambulance
- Testing of the acceleration of the vehicle in limited time
- Testing of rounded edges and radius inside the patient's compartment to prevent sharp edges
- Testing of the system such as ventilation system, heating system, and cooling system
- Testing of interior lighting
- Testing of an infusion holding system
- Verifying the patient's compartment properties, etc.
- Verifying the loading area properties

- Verifying the dimensions of the patient's compartment
- Verifying the size of seat

The Federal Specification for Star-of-Life Ambulances (KKK-A-1822) is the first published specification for the ambulance by GSA (General Service Administration) in the mid-1970s, and it became a well-known and commonly used standard in the ambulance industry in the USA [20]. However, this purchase specification could not be used as a safety performance standard due to the lack of guidelines for any dynamic crash testing [21]. When the Society of Automotive Engineers (SAE) published ten testing methods, the national bumper-to-bumper ambulance design standards and specifications consisted of those testing methods as a reference [20]. Now in all three national standards, GSA KKK-A-1822, National Fire Protection Association (NFPA) 1917 and Ground Vehicle Standard (GVS) have already referred to SAE publications. The new ambulance crash test methods published by the SAE are given in Table 2.1 [22].

Table 2.1. SAE test methods and referred standards

| **SAE Number** | **Topic** | **GSA 1822** | **NFPA 1917** | **GVS v1.0** |
|---|---|---|---|---|
| J2917 | Front Crash Pulse | Yes | Yes | Yes |
| J2956 | Side Crash Pulse | Yes | Yes | Yes |
| J3044 | Rear Crash Pulse | Yes | Yes | Yes |
| J3026 | Seat Test | Yes | Yes | Yes |
| J3027 | Patient Litter (Stretcher) or Cot Test | Yes | Yes | Yes |
| J3043 | Equipment Mount Test | Yes | Yes | Yes |
| J3057 | Patient Compartment Test | Yes | Yes | No |
| J3058 | Interior Storage Cabinet Test | Yes | Yes | No |
| J3059 | Seat Occupant Head Excursion Measurement | Yes | Yes | No |
| J3102 | Patient Compartment Sub-Floor Test | Yes | Yes | No |

As stated that there are different standards and approaches for road ambulance vehicles in different countries. Although these standards are not well developed in terms of safety when compared with automotive safety regulations, directives, and standards, they can be improved in time by researching the ambulance vehicle environment. When comparing to the specifications of the Society of Automotive Engineers (SAE) and the European Norm approach in terms of dynamic testing conditions, there are some main differences and similarities between those published standards.

The proposed dynamic testing procedure and defined acceptance criteria are covered under the Clauses 5.4 and 4.5.9 by the EN standard; on the other hand, there are related ten recommended practices/test methods in the SAE standard. Thus, both of the approaches are reviewed in detail to identify differences and similarities. In order to conduct this review systematically, below stated areas are chosen:

1. Test pulses and test directions
2. Testing of the stretcher fixation to the vehicle floor
3. Testing of the stretcher system integrity
4. Testing of equipment mount devices and storage compartments
5. Testing of rear compartment seating integrity and restraint of occupant
6. Testing of box type patient compartment
7. Similarities of two technical approaches

The first and foremost, the main difference is about the proposed crash pulse characteristics for the dynamic test of occupant restraint and equipment mounting integrity tests. There are more than one pulse forms in the SAE recommended practices. SAE J2917 proposes impact sled pulse corridor for the frontal impact test as shown in Figure 2.11 and the implemented pulse must fall into this upper and lower limits during the test. The upper limit of this corridor goes to 22.5 G as the maximum, and the total duration of the test is 0.140 seconds. During the test, total velocity change $\Delta v$ shall be 31 mph ±1 mph [23].

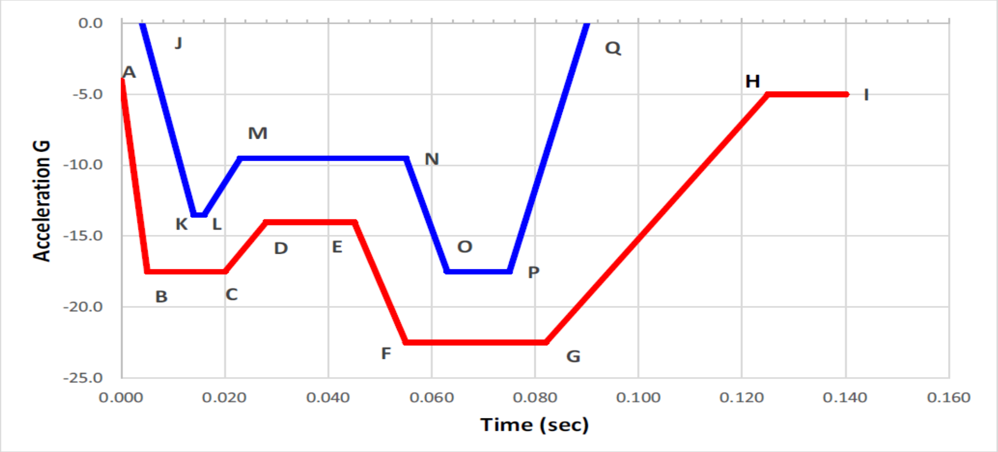

Figure 2.11. SAE J2917 frontal dynamic (sled) test corridor [23]

SAE J3044 proposes impact sled pulse corridor for rear impact test as shown in Figure 2.12 and the implemented pulse must fall into this upper and lower limits during the test. The upper limit of this corridor goes to 11 G as the maximum, and the total duration of the test is 0.1 seconds. During the test, total velocity change $\Delta v$ shall be 10 mph ± 0.5 mph [24]. SAE J2956 proposes impact sled pulse for side impact test as shown in Figure 2.13, and the implemented pulse must fall into this upper and lower limits during the test. The upper limit of this corridor goes to 26 G as the maximum, and the total duration of the test is 0.055 seconds. During the test, total velocity change $\Delta v$ shall be 15 mph ± 1 mph [25].

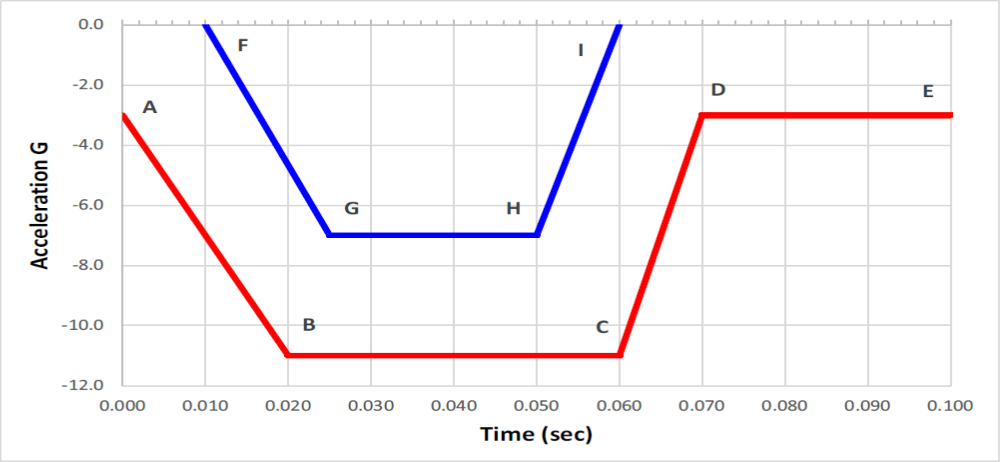

Figure 2.12. SAE J3044 rear dynamic (sled) test corridor [24]

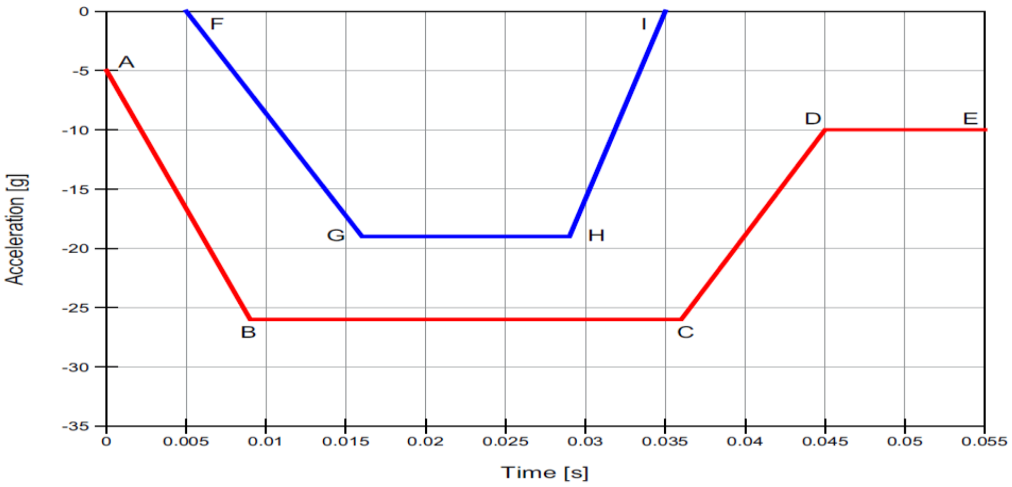

Figure 2.13. SAE J2956 side dynamic (sled) test corridor [25]

On the other hand, when the EN standard is reviewed, it has just proposed one type of pulse for five directions of dynamic test shown in Figure 1.5. Both upper and lower limits of pulse values and $\Delta v$ which are given in SAE standards are much higher than those given in the EN standard. Only the sled pulse corridor for the rear one, both the maximum and the minimum limits are lower than the EN standard's values. Also, the total velocity change is lower than the EN standard.

When considering the test directions, in the SAE standard frontal/rear impact test, which the pulse is applied parallel to the vehicle longitudinal axis and side impact test, which the sled pulse is applied perpendicular to the vehicle longitudinal axis are defined. In the SAE standards, there is no vertical test (+z) configuration, which is required in the EN standard.

The second issue is the testing of the stretcher fixation to the vehicle floor. SAE J3102 defines dynamic test mass (representative of actual equipment) as "A rigid, inert structure that represents the physical dimensions, weight and center of gravity in all axes of the stretcher, 50th percentile male patient (77.6 kg or 171 pounds), and Stretcher Retention Device or System" [26]. Thus, the ambulance substructure and dynamic test mass shall be tested utilizing the pulse corridors specified in SAE J2917, SAE J2956, and SAE J3044, respectively. On the other hand, stretcher and dummy test mass are defined as 126 kg (i.e., equivalent to 51 kg for the stretcher and 75 kg for the patient) according to the referred standard in EN 1789+A2 standard.

The third issue is the testing procedure to qualify patient stretcher, stretcher retention system, and patient restraint in stretcher when exposed to dynamic tests. SAE J3027 has been published for evaluating the performance of these types of equipment. Qualification of the patient stretcher, retention, and restraint systems are beyond the scope of EN 1789+A2, yet these types of equipment are qualified according to EN 1865, which consist of the following parts [27];

- Section 1: General stretcher systems and patient handling equipment
- Section 2: Power-assisted stretcher
- Section 3: Heavy-duty stretcher
- Section 4: Foldable patient transfer chair
- Section 5: Stretcher support

EN 1865-1 states that the fixation of the main stretcher (consists of stretcher part in combination with an integrated or detachable undercarriage) shall satisfy Clause 4.5.9 of EN 1789+A2. When the main stretcher system subjected to accelerations/decelerations of 10 g in required directions; the distance traveled by a person or item shall not put at risk to the safety of persons and no items shall have sharp edges [13]. The EN standard states “The maximum traveled distance of the stretcher and any item attached to either the holding assembly or stretcher shall not be more than 150 mm, yet displacement of the patient may exceed this distance” [13]. As stated before, EN 1789+A2 does not cover patient stretcher, stretcher retention system, and patient restraint qualification. However, TS EN 1865-1 shall also be used in the related test to qualify fixation of the main stretcher. It should be emphasized that dynamic testing procedure and test conditions are not well defined to qualify the fixation of the main stretcher systems, neither in EN 1865-1 nor EN 1789+A2.

For the fourth issue, there is almost the same approach about testing and the pass-fail criteria of Ambulance Equipment Mount Device/ Systems and Ambulance Interior

Storage Compartment Integrity, which are given in SAE J3043 and SAE J3058 respectively. Contrary to the EN standard, the test masses specification, their position in storage compartments, test conditions and acceptance criteria are well defined and detailed in SAE J3058. As the acceptance criteria, when the load-bearing components are preserved, deformation of the storage compartment and a fracture is acceptable in J3058. Besides, the closing/locking device ( doors with track, hinges, or drawer guide) shall remain attached during and after the test [28]. However, in the EN standard acceptance criteria for storage compartment testing are not clear.

The fifth issue is the ambulance rear compartment seating integrity and restraint of occupant. SAE J3026 has been published to evaluate the performance of forward facing, the side facing and rear-facing seating system and restraint system in the patient compartment of an ambulance when applied to the side and frontal impacts. In addition, all the lockable positions (such as 45 degrees) need to be tested for rotating seats. For forward or rear-facing, measured and calculated biomechanical parameters of 50th percentile adult male Hybrid III ATD shall not exceed the specified values in FMVSS 208. For side facing, measured and calculated biomechanical parameters of 50th percentile adult male ES-2re ATD shall not exceed the specified values in FMVSS 214. Alternatively, for side facing, the maximum calculated $HIC_{36}$ (Head Injury Criterion) shall not exceed 1000, the resultant acceleration from the thoracic instrumentation shall not exceed 60 g when using the 50th percentile adult male Hybrid III ATD [29]. In this way, SAE J3026 proposes the same occupant seat and restraint system performance of seat belted passengers in light vehicles for the patient compartment of an ambulance. On the other hand, there is no dedicated section for ambulance rear compartment seating integrity and restraint of occupants in the EN standard. Only directives such as 74/408/EEC, 76/115/EEC, 77/541/EEC are referred for permanent seats, their anchorages, seat belts, and seat belts anchorages.

SAE J3059 also proposes the method in order to evaluate the maximum head travel path of occupants who seated and were restrained position in the rear compartment of an ambulance. The goal is to define the testing procedure to get data for designing a safe ambulance patient compartment for occupants for the ambulance manufacturers. Excursion zones, which mean the volume of space when measuring the Head Trajectory in three planes (X, Y, Z) for the given seating system in each configuration tested, shall be identified by using SAE J2917, SAE J2956 and SAE J3044 [30].

The sixth issue, unlike in the EN standard, SAE J3057 has been published for box body type road ambulances. Basically, this standard consists of strength testing to prove the crush resistance, operation of doors and body mount-to-frame connection in a rollover accident. The first test is a dynamic pre-load test which simulates the side loading on the roof rail of the box body as it impacts to ground during rollover as shown in Figure 2.14 [31]. During testing, a rigid moving barrier is used as a dynamic load input device.

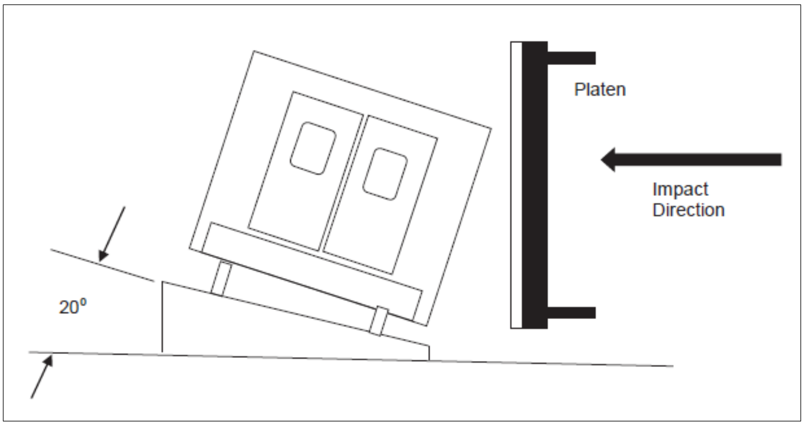

Figure 2.14. Dynamic pre-load configuration [31]

The second test is a quasi-static roof-strength test that simulates the loading on the modular body when the vehicle is completely inverted. As shown in Figure 2.15, a rigid moving platen applies the force quasi-statically. According to the standard, the box body should bear a force which equals to 2.5 times of curb weight of the vehicle [31]. Although the scope of the EN standard covers the ambulances which are produced as a box body, there are no such tests in order to prove the strength of the box body for the patient compartment.

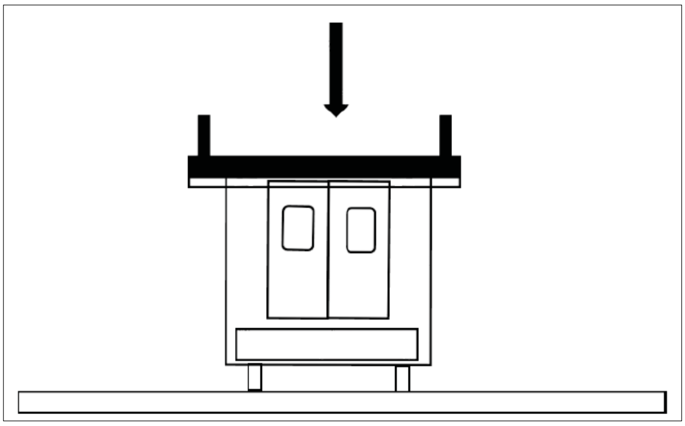

Figure 2.15. Roof load test setup [31]

According to similarities of two standards when the test mass represents the physical dimensions, weight and center of gravity in all axes of the intended use of real equipment, both of them allow to use the representative test mass for testing the stretcher fixation to the vehicle floor, equipment mount devices and storage compartments. Further, there is an option to conduct dynamic testing or static testing in the standards. However, apart from EN 1789+A2, there are separate, detailed sections for the static testing procedure in SAE recommended practices such as J3058, J3043, J3002, etc.

Since European Standard (EN 1789+A2) defines the specifications for the design, testing, performance and equipping of ground ambulances, it could not be expected to have similar technical details with recommended practices of SAE, which are customized for testing of ambulance vehicle. According to the above comparisons, it seems that there are some ill-defined procedures in the dynamic testing and not well-defined acceptance criteria, which need to be used for interpreting the test results. In the forthcoming revisions of the EN standard, the Technical Committee (CEN/TC 239 Rescue Systems) should consider studies, researches and other related published recommended practices for ambulance vehicles to contribute occupant safety in the ambulance environment via elaborated safety standard for ambulances.

### 2.3. Conformity Assessment for Road Ambulances

According to TS EN ISO/IEC 17000, conformity assessment defines “proving established requirements for a product, system, person, or organization have been met” [32]. Conformity assessment activities can be specified, such as testing, certification, inspection, and accreditation.

In Turkey, “Emergency Health Care Vehicle and Ambulance Services Regulation” (Regulation No/Date: 26369 /07.12.2006) is in force to regulate all issues about road ambulance vehicles. According to the amendment (RG-10/4/2012-28260) of this regulation, TSE has been authorized by the Ministry of Health for the inspection of road ambulances in line with “TS EN 1789+A2-Medical vehicles and their equipment - Road ambulances”. Thus, this standard became a mandated reference standard for road ambulances in Turkey. According to this authorization, the first inspection, periodic inspection, inspection after modification are conducted by the supervision of TSE. If all the requirements of the standard and the regulation are satisfied, then “TS EN 1789 Appendix-C Certificate of Conformity” can be issued by TSE as an authorized body.

As stated above sections, the current version of the EN standard (Clause 4.5.9 and Clause 5.4) requires dynamic tests as a part of the conformity assessment of road ambulance vehicles. These dynamic tests are conducted in an accredited laboratory (accredited according to TS EN ISO/IEC 17025) with the supervision of the authorized body. In the next section, the test facility which is capable of conducting road ambulance dynamic tests in Turkey is going to be introduced.

## 2.4. Test Facility for Dynamic Testing

Actual accident conditions can be simulated with full-scale crash tests; however, full-scale crash tests are overpriced and complicated. Sled testing is the easiest way for interpreting the crash safety of vehicle interiors without destroying vehicle structure. Primarily, the sled test can be commonly conducted to assess the restraint systems. The sled test utilizes a vehicle configuration as a sample to represent the passenger compartment with its interior systems such as the seat, holding and fixation systems, airbags, etc. Their performances, effectiveness, and resistances are identified by subjecting dynamic loads, similar to a vehicle deceleration-time pulse in different impact conditions such as frontal, side-impact, etc.

The IST Crash Simulation System has been founded in METU-BILTIR Center Vehicle Safety Unit Sled Test Facility in 2009. The type of the test system at the METU-BILTIR Vehicle Safety Unit is an accelerator sled type crash test system as shown in Figure 2.16. In this study, this system has been used and the necessary auxiliary test equipments are given in the following paragraphs.

Figure 2.16. Test facility in METU-BILTIR Vehicle Safety Unit

Below are the testing capabilities and scopes of the crash simulation system [33]:

- Dynamic tests and static strength test for the seat belt, seat belt anchorages, restraint system testing (ECE R 14, ECE R 16)
- Dynamic tests for the seat, anchorages, and headrests (ECE R 17, ECE R 80)
- Dynamic and overturning tests for child restraint system (ECE R 44)
- Dynamic test for road ambulances and their equipment (TS EN 1789+A2)
- Determination of a dynamically determined head impact zone for vehicle interior fitting (ECE R 21)
- Head form and body form test for the steering mechanism (ECE R 12)
- Dynamic seat testing to AS 8049 (Aerospace Standard)
- Crash simulation tests with dummies in the vehicle body or on a rigid fixture
- Plane Seat tests (FAR/JAR 23, FAR/JAR 25 and FAR/JAR 27)
- Wheelchairs tests (NEN 2746, ISO/SD 10542, ISO/CD 7146, DIN 75078-2)
- EURO NCAP& US NCAP Frontal and Rear Crash Tests

The catapult rig is the loading unit of CSS (Crash Simulations Systems) and it mainly consists of the following components; Pressure Accumulator, Return Oil Reservoir, Hydraulic Control Manifold, Servovalve Unit, Bearing Oil Pump and Hydropuls® Catapult Actuator with piston lock. The hydraulic system of the crash simulation system is given in Figure 2.17.

The catapult rig simulates mechanical sequences of real traffic accidents is part of the CSS (Crash Simulations Systems) in the laboratory. The Hydropuls® catapult actuator accelerates the test sled with the pattern of the target signal. Basically, the test object is at rest and mounted on top of a sled platform for an acceleratory type sled system. Then the hydraulic cylinder hits the platform to bring its speed up to impact speed. The pulse is produced during acceleration. Hydraulically actuated friction brake system act and decelerates the sled. Parameters such as displacement, velocity and acceleration on the dummy or the car body are measured by sensors. Thus, vehicle crashworthiness and occupant safety can be evaluated by these data.

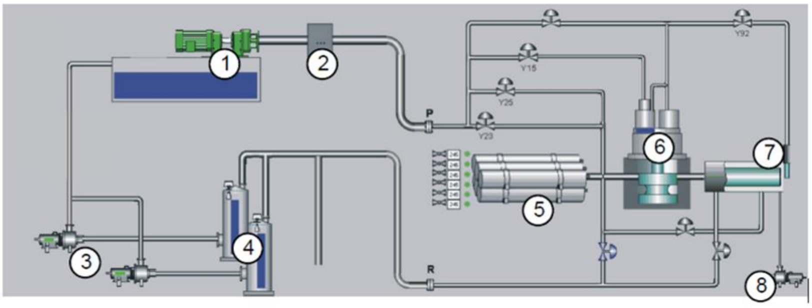

1 Hydraulic power pack
2 Hydraulic control manifold
3 Two vane pumps (return oil pumps)
4 Return oil reservoirs
5 Pressure accumulator station
6 Servo valve unit
7 Catapult actuator with piston lock
8 Bearing oil pump

Figure 2.17. Hydraulic system [34]

The Hydropuls® catapult actuator is composed of Impact Piston, Piston Lock, Safety Valve, Transducer, and Sensors. The impact piston of the Hydropuls® catapult actuator can be accelerated with an acceleration force of up to 2,500 kN. The impact piston accelerates the contacting test sled together with the test setup in compliance with the acceleration characteristics. The piston’s working stroke is 1,700 mm. The specifications of the catapult actuator are given in Table 2.2 [34].

Table 2.2. Catapult performance data in METU-BILTIR Vehicle Safety Unit [34]

| | |
|---|---|
| Acceleration force | max. 2,500 kN |
| Working stroke | max. 1,700 mm |
| Payload | max. 2,500 kg |
| Velocity | max. 90 km/h |
| Acceleration | max. 90 g |
| Acceleration gradient (typical value) | >10 g/msec |
| Frequency range | max. 150 Hz |
| Tolerance on maximum speed | max. +/- 0,5 km/h |
| Repeatability (acceleration) | ± 1 g |
| Repeatability (velocity) | ± 0,5 km/h |

Figure 2.18. Crash test dummies

According to the crash test requirement, the crash test dummies can be used as shown in Figure 2.18. A crash test dummy is a “full-scale anthropomorphic test device (ATD)” which exemplifies the size, weight and joint of the human body. They are utilized as a test device for a broad range of test applications in the automotive, aircraft, and defense industries. Dummies can be classified basically in two categories, such as ballast dummies (dummies without sensors) and instrumented dummies (dummies with sensors). Instrumented dummies provide measurements such as the velocity of impact, acceleration, forces, moments, deflection, deceleration, etc. [35]. Nowadays, more than 20 different dummy types are available according to the application type, as shown in Table 2.3 [36].

Table 2.3. Type of dummies [36]

| **Application** | **Anthropomorphic Test Devices Type** |
|---|---|
| Frontal impact | Hybrid III family, THOR |
| Lateral impact | EuroSID, EuroSID2, SID, SID-HIII, SID IIs, BioSID, WorldSID |
| Rear-end | BioRID, RID2 |
| Pedestrian | POLAR |
| Children | P0, P3/4, P3, P6, P10, Q-dummies, CRABI |
| Belt | TNO-10 |
| Impactor | free motion head impactor, head/hip/leg impactor for pedestrian |

Crash test dummies have different weights and sizes. The Hybrid III family of dummies includes a 3-year-old, 6-year-old, 10-year-old, small adult female (5th percentile), mid-sized adult male (50th percentile) and large adult male (95th percentile). These dummies are basically generated for the frontal impact tests. Among these, the Hybrid III 50th percentile male dummy is the most commonly used crash test dummy for the evaluation of automotive restraint systems in frontal crash testing. METU-BILTIR Vehicle Safety Unit possess Hybrid III 50th percentile male (instrumented and ballast), Hybrid III 95th percentile male (instrumented and ballast), Hybrid III 5th percentile female (instrumented), BioRID II, TNO-10 seat belt testing dummy and child dummies (P-Series).

High-speed videos of the tests are recorded during the tests in order to conduct a visual examination of testing and also it gives evidence for post-test inspection. As it is well known, sled tests occur very quickly, such as a few hundred milliseconds and movements of an object that cannot be seen clearly with naked eyes. As a result, high-speed cameras are very convenient to make this too short event observable and investigable in the sled crash type tests.

There are two types of high-speed cameras used at METU-BILTIR Center Vehicle Safety Unit. The first type of these cameras is Visario G2, which records the tests up to 1000 fps with 1536 x 1024 resolution and up to 2000 fps with 1024 x 768 resolution as shown in Figure 2.19. The second one is the Speedcam Minivis camera, which records the tests up to 500 fps with 1280 x 1024 resolution as shown in Figure 2.20. In this study these two types of high-speed cameras are used.

CrashCam mini 3510 high-speed cameras (Figure 2.21), which records the tests up to 1000 fps with resolution (2560 x 1440), are also available in METU-BILTIR Center Vehicle Safety Unit.

Figure 2.19. Visario G2 high-speed camera

Figure 2.20. Speedcam minivis camera

Figure 2.21. The CrashCam mini 3510

Dynamic tests are conducted under strict safety standards and the repetition of each test is very expensive, so the maximum amount of data should be extracted from each test [37]. The high-speed data-acquisition system is used to gather the measurements from the accelerometers, strain gauges, angle gauges according to the response of the vehicle and occupant. There are two resemble reference standards (SAE J211-1, ISO 6487) for measurement techniques involving the instrumentation used in impact tests carried out on-road vehicles. All measurements should be recorded, filtered, and processed according to these standards. In METU-BILTIR Center Vehicle Safety Unit, the Minidau Advanced used during the test has 32 analog channels, of which 16 of them can also be used as digital channels as a high-speed data-acquisition system shown in Figure 2.22.

Figure 2.22. Minidau advanced with 32 channels

Lightning is significant in order to conduct sufficient investigation of the high-speed imaging during the sled test; thus, the intensity of light is very crucial. The videos gathered by high-speed cameras are not usable if sufficient light is not available. In the lightning process, two light bank frames with six lights (digital control) with approximately 150.000 lux are available in METU-BILTIR Center Vehicle Safety Unit, as shown in Figure 2.23. There are also two movable and two onboard light sources. The systems supply adequate light for high-speed cameras.

Figure 2.23. Lighting system

In sled tests, different types of sensors are required according to applications such as load cells, accelerometers, angle gauge, etc. Accelerometers are the sensors that measure acceleration, which is the rate of change of the velocity of an object. Acceleration is quantified SI unit meters per second ($m/s^2$) or in terms of g-force. Accelerometers are attached to the system on the bottom part of the sled shown in Figure 2.24.

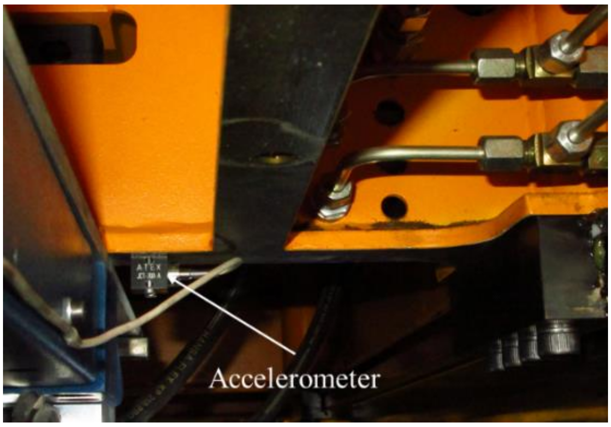

Figure 2.24. Accelerometer in sled

# CHAPTER 3

# PROPOSED DYNAMIC TESTING PROCEDURE

## 3.1. Introduction

As stated in the second chapter, there are different types of standards and approaches in order to evaluate the safety of strength of mounting systems and fixation of the equipment in the patient's compartment of medical road ambulances. Similar to other dynamic test standards, the EN 1789+A2 standard also proposes a dynamic test under various configurations. According to the proposed dynamic test, test assembly shall be accelerated/decelerated in the longitudinal, transverse, and vertical directions in order to test the stability and safety performance of the retrofit of the patient compartment. As stated in the previous chapters, interpretation of the dynamic test described in the EN 1789+A2 standard may cause ambiguities during the preparation and conducting of the sled test and evaluation of the test results. To avoid the ambiguities, a new test procedure, which includes sample preparation, test process, post-test inspection and evaluation of test results, is proposed and explained in the following sections.

## 3.2. Dynamic Test Process

A general flow chart that summarizes the basic steps currently applied in METU-BILTIR Center Vehicle Safety Unit in dynamic tests is given in Figure 3.1. These basic steps mainly include;

- Preparation of test sample,
- Testing,
- Inspection after test and evaluation of test results.

These steps are detailed in the following sections.

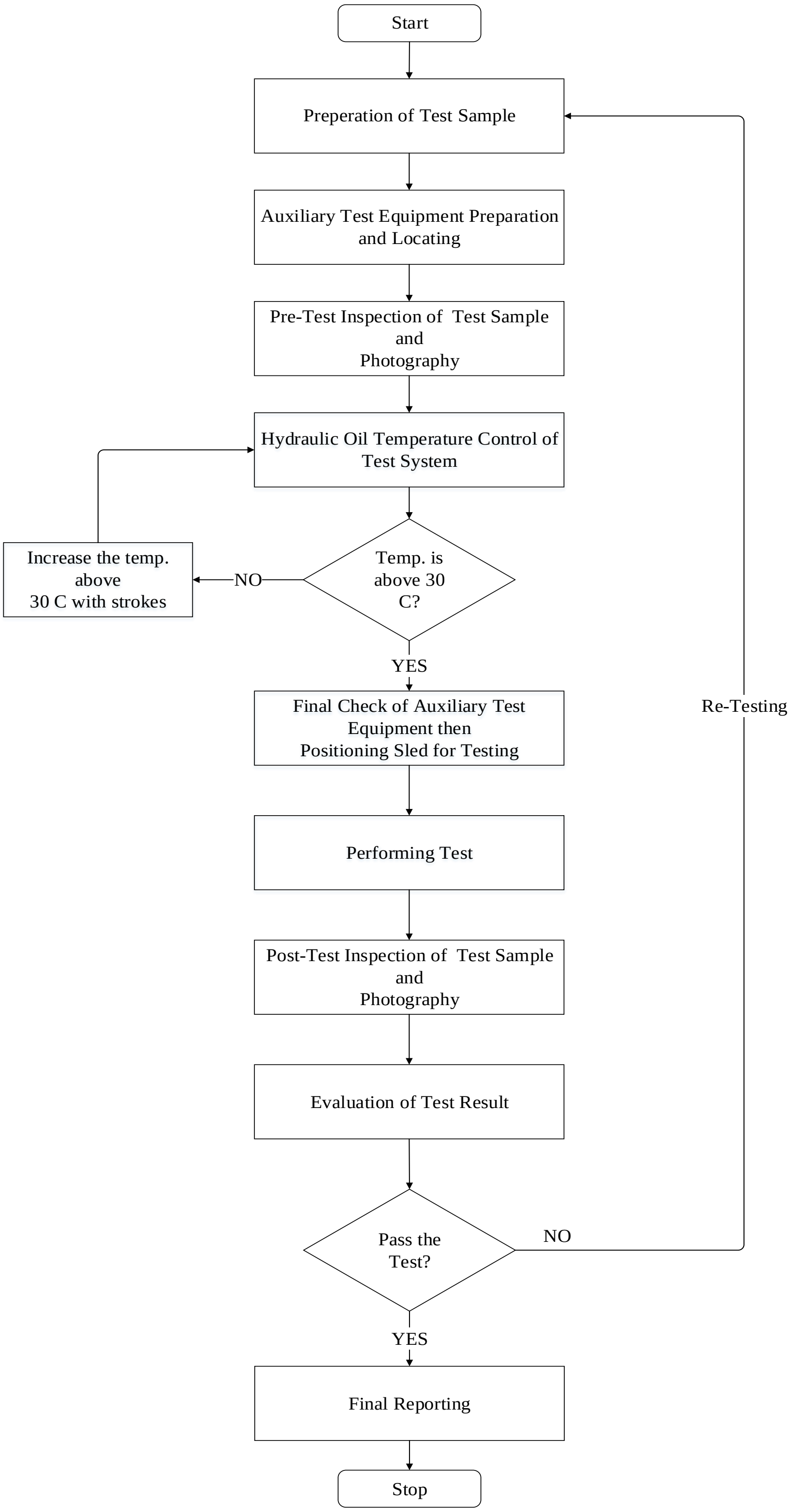

Figure 3.1. General flow chart of dynamic tests in road ambulance vehicle

### 3.3. Preparation of Test Sample

The preparation of the test sample process can be divided into two major categories such as interior and exterior preparation of the rear patient compartment of the vehicle for dynamic testing.

Interior Preparation of Test Sample

- Main Stretcher fixation on the vehicle floor
- Medical devices fixation
- Storage compartments (cabinets, drawers) preparation
- Permanent Seats and their anchorages preparation
- Other equipment (fire extinguisher, oxygen system, etc.) fixation

Exterior Preparation of Test Sample

- Test sample preparation to fasten the test fixture to the sled
- Back door fixation preparation of test sample
- Camera holding assembly fixation on the test sample
- Eye bolt fixation locations preparation on test sample for locating with hoisting crane

Figure 3.2. Test sample preparation

As a general approach, below stated suggestions about test sample preparation should be followed to ensure proper conformity assessment;

- The manufacturer should conduct all interior and exterior preparation in the supervision of the authorized body.
- Representative test masses can be used instead of actual equipment if the authorized body accepts their conformity.
- The manufacturer should present technical documents for fixation and mounting approach with all details, and these details should be verified before and after the testing.
- The authorized body should check reinforcements for fixation of the vehicle.
- The authorized body should give final approval to test a sample before starting dynamic tests.

According to EN 1789+A2, the main field of interest for the dynamic test is;

- testing of the stretcher fixations on the vehicle floor
- testing of the medical devices fixations
- testing of furniture

Thus, while sample preparation is conducted, these three test areas which are all inside the patient compartment of the ambulance should need more focus.

### 3.3.1. Stretcher Fixation on the Vehicle Floor

Ambulance manufacturers mostly use MDF (medium-density fiberboard) type sub-structure and covered for the patient compartment floor in order to ensure a proper flat surface and required anti-slip, tightness properties, etc. The dynamic test is required to evaluate both the integrity of the ambulance floor structure and the fixation of the stretcher assembly on the floor. The test set-up considers the fixation between the actual road ambulance floor and stretcher. The conformity evaluation of the stretcher assembly and the patient’s restraint system is not an objective of this test. Therefore, it is allowed to use test mass, which represents the original stretcher and dummy mass.

According to regular use of stretcher, connection type may differ among ambulance manufacturer, some of them may use interface between floor and stretcher such as stretcher support. Test mass preference also may be different according to different situations and needs of the ambulance manufacturer during testing. Flow diagram of the preparation of the test sample is given in Figure 3.3.

Before the start of testing, connection type, which is a critical parameter for testing stretcher fixations on the vehicle floor, shall be defined. Stretcher support may be used in order to fasten the stretcher to the vehicle as an interface. In this case, the manufacturer shall define the maximum weight and height of the center of gravity of stretcher support. In addition, the stretcher support shall comply with EN 1865-5. According to the normal usage of a stretcher defined by the manufacturer, the test can be performed with floor-mounted locks without any interface structure. For either case, an actual stretcher or equivalent mass representing the stretcher and dummy can be used unless there will be an evaluation of the stretcher assembly and the patient's restraint system.

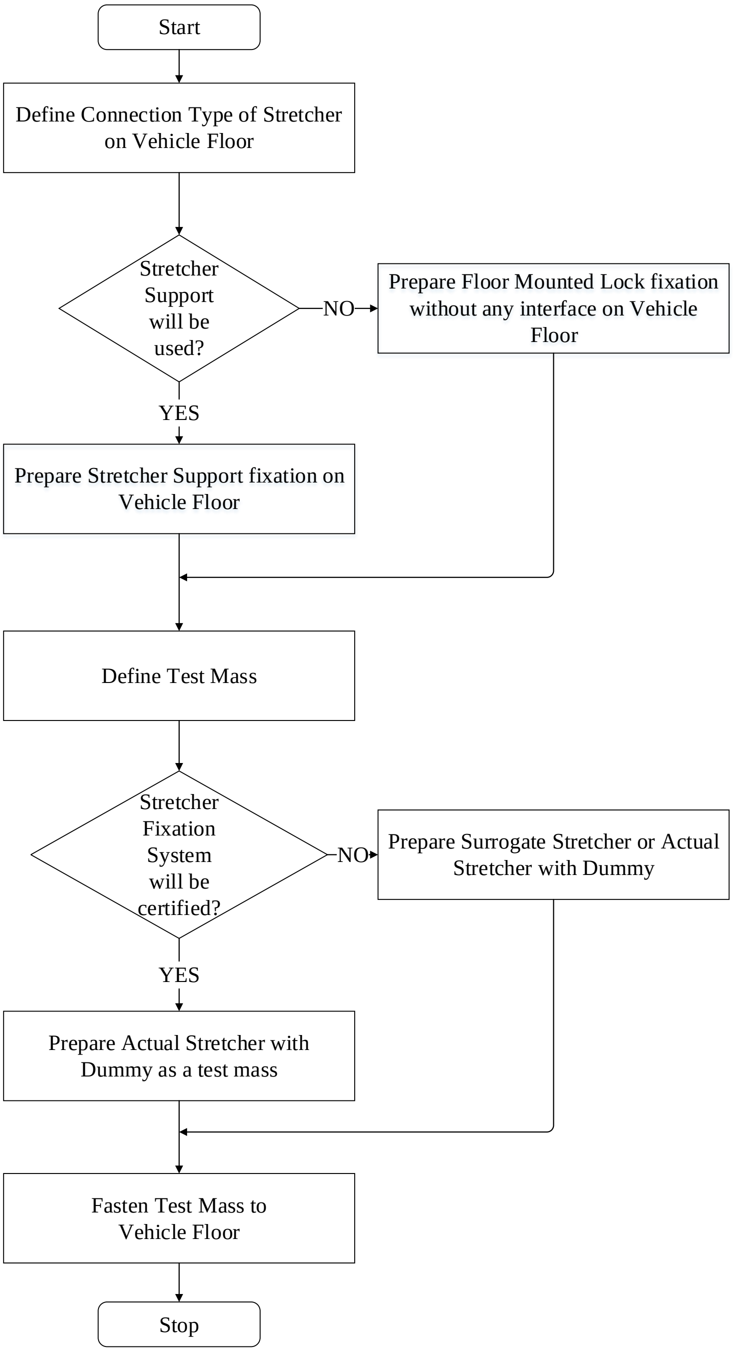

Figure 3.3. Preparation of stretcher on the vehicle floor

For each case, total test masses are equal, and the test shall be carried out using a test mass of 126 kg (equivalent to 51 kg for the stretcher and 75 kg for the patient). An actual production stretcher and test dummy, which is referred in ECE-R 16, Annex 7 (m=75 kg) are used, are shown in Figure 3.4. The floor-mounted lock with actual stretcher test sample representation is shown in Figure 3.4 and Figure 3.5. The test may be performed with an equivalent mass representing the stretcher (i.e. surrogate stretcher) and a dummy that meets the physical dimensions, weight, and center of gravity in all axes. Besides, a representative stretcher shall be provided with the same connection points to the substructure of the patient compartment that matches up with the intended use of an actual stretcher. Representative test mass is shown in Figure 3.6.

As stated before the evaluation of the stretcher assembly (stretcher, undercarriage, fixation and restraint system) and the patient's restraint system is not an objective of this test referred in EN 1789+A2 Clause 5.4.2, because another standard (EN 1865-1) describes the designs and requirements for the stretchers, for the transport of patients in the road ambulance. However, these two standards are firmly related that the needs for the stretcher fixation system shall be in accordance with the Clause 4.5.9 of standard EN 1789+A2. For that reason, both fixations on the floor and fixation system of stretcher can be tested at the same time according to manufacturer need. In this case, an actual stretcher with dummy shall be used, and dummy shall be restrained with the patient's restraint system according to manufacturer instruction. No reinforcement should be made to protect the patient stretcher. The actual fixation and patient restraints should be used. If this is done, the patient stretcher and floor mount could be qualified to EN 1865-1 simultaneously.

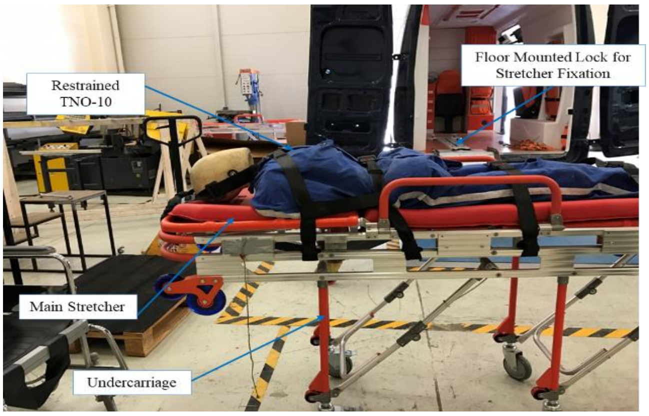

Figure 3.4. Preparation of stretcher fixation on the vehicle floor

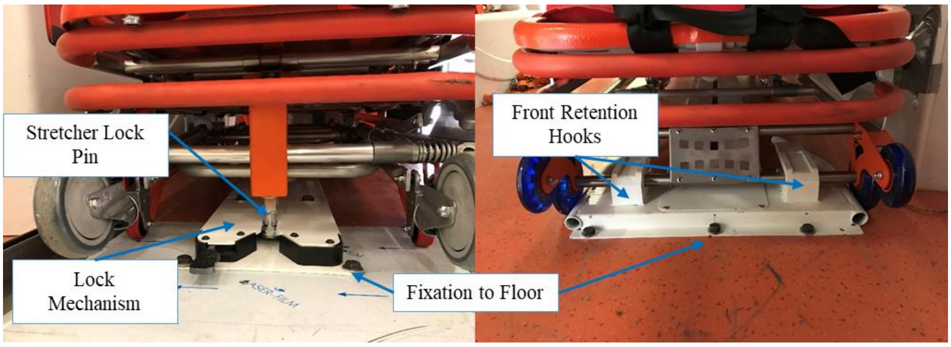

Figure 3.5. Fixation detail of stretcher on the vehicle floor

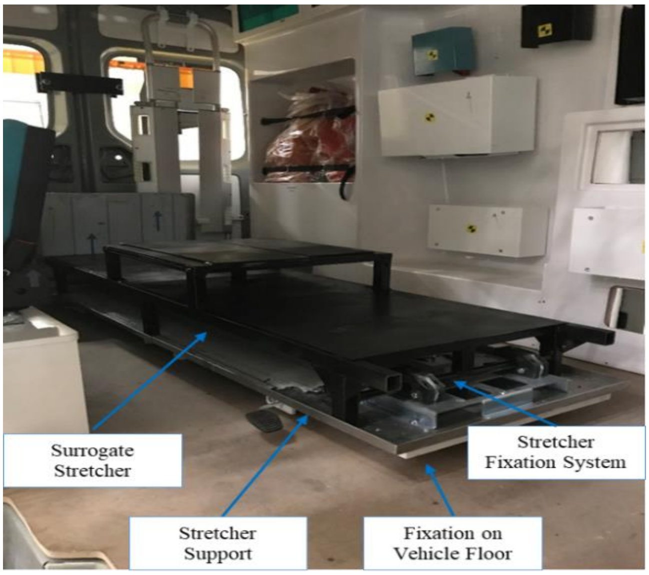

Figure 3.6. Surrogate stretcher with stretcher support

### 3.3.2. Medical Devices Fixation

Depending on the ambulance vehicle type (A1, A2, B, and C), the equipment carried by the road ambulances are determined in Tables 9 to 19 of EN 1789+A2. There are many different kinds of equipment, such as oxygen systems, ventilator, defibrillators, vacuum aspirator, fire extinguisher, infusion pump, etc.

The main intention of this test is to assess the integrity of the equipment mount/fixation device or system during the dynamic test. Before the test, type of fixation, admissible mass and the location of the fixing points shall be defined. Test mass, which represents the weight and dimension of actual equipment, can be used for testing the holding system.

According to Clauses 5.4.3 and 6.3.5 of EN 1789+A2, both fixation points of medical devices on the ambulance vehicle and medical device fixation system should be tested, details of the test are shown in Table 3.1. For the first item in the table, there should be an equipped ambulance body structure for testing fixation points. The fixation points and fixation system of medical devices could be qualified according to EN 1789+A2 simultaneously. The original fixation points and fixation system of medical devices should be used.

For instance, the preparation of fixation points and the original fixation system of the injector pump, the defibrillator, the scoop stretcher are shown in Figure 3.7 and Figure 3.8, Figure 3.9 respectively.

From the comparison of standards presented in the second chapter; it seems fixation system of medical devices can be dynamically tested by using a fixture representing the ambulance body. However it is unclear in the EN 1789+A2.

Table 3.1. Fixation of medical devices

| **No** | **Test Name** | **Related Item** | **Explanation** |
|---|---|---|---|
| 1 | Testing of the medical devices fixations points | TS EN 1789 +A2 Clause 5.4.3 | Fixing points can be tested with a test mass corresponding to the permissible load declared by the manufacturer of the ambulance for each point. |
| 2 | Testing Fixation/ Mounting System of Devices | TS EN 1789 +A2 Clause 6.3.5 | The fixation systems of medical devices shall hold the medical device to withstand accelerations or decelerations of 10g. |
| Note: If a rail system is used to maintain medical devices, the conformity should be checked according to EN ISO 19054. | | | |

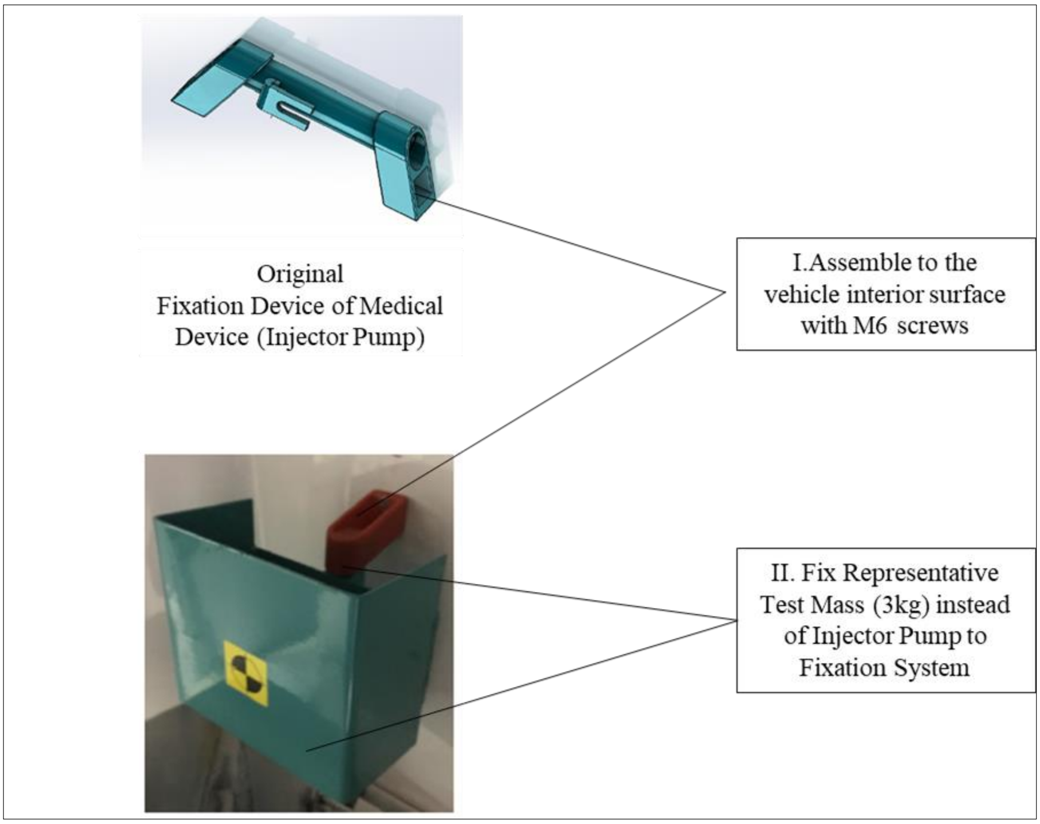

Figure 3.7. Injector pump fixation with original fixation device for testing

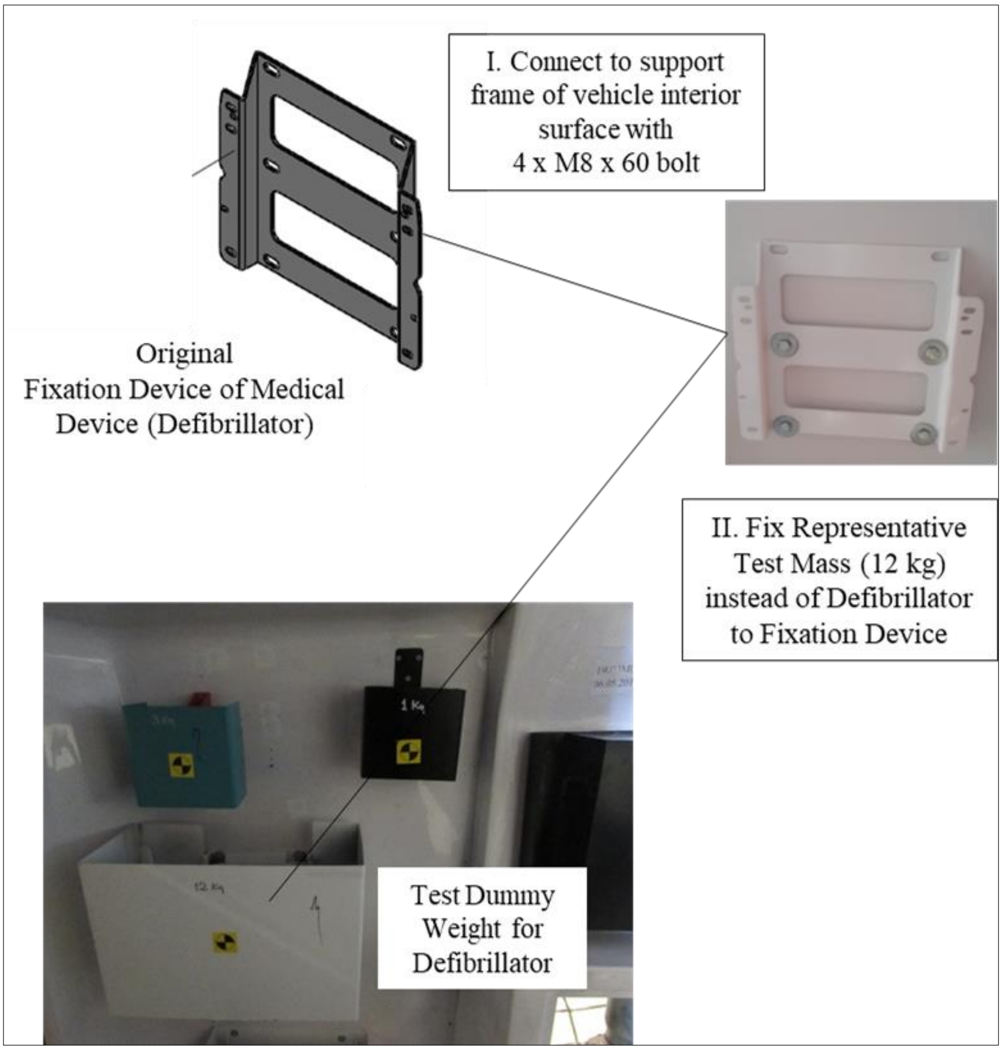

Figure 3.8. Defibrillator fixation with original fixation device for testing

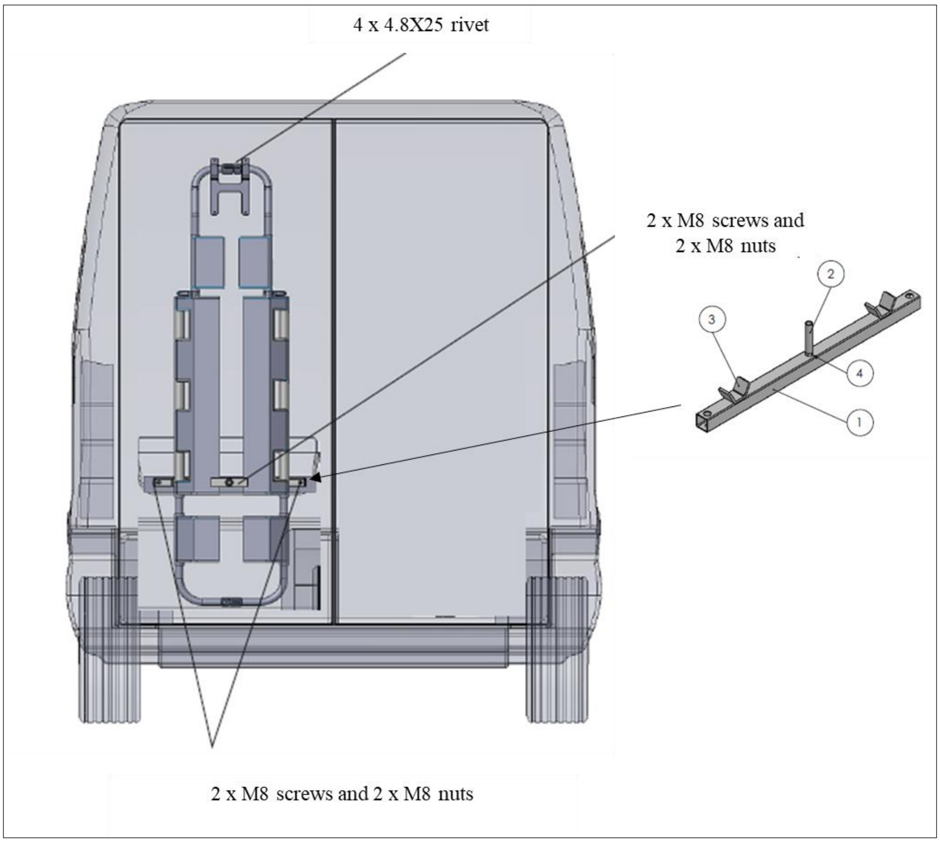

Figure 3.9. Scoop stretcher fixation

### 3.3.3. Furniture

The main intention of this test is to evaluate the integrity of the interior storage compartments such as cabinets, drawers used to contain and safely secure emergency medical service supplies, tools, medical devices or other equipment within an indoor space when exposed to dynamic testing from different directions. The manufacturer shall define the maximum design weight permitted to be stored in the storage compartment. Sandbag shall be made in order to use as a test mass with a weight tolerance of +10 % and 0 %. It shall be ensured that the storage compartment door or lid is closed and latching mechanisms are appropriately engaged after the test. The preparation of drawers and storage compartments are shown in Figure 3.10 and Figure 3.11. In order to show the completed test sample (fully equipped patient compartment), the 3D view is given in Figure 3.12.

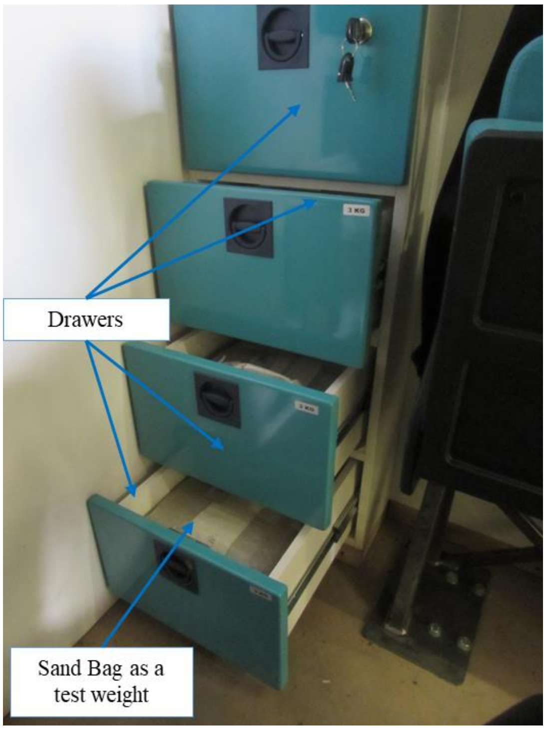

Figure 3.10. Drawers with test mass

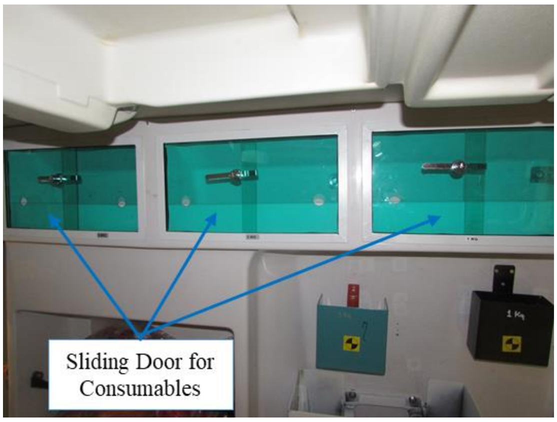

Figure 3.11. Storage for consumables

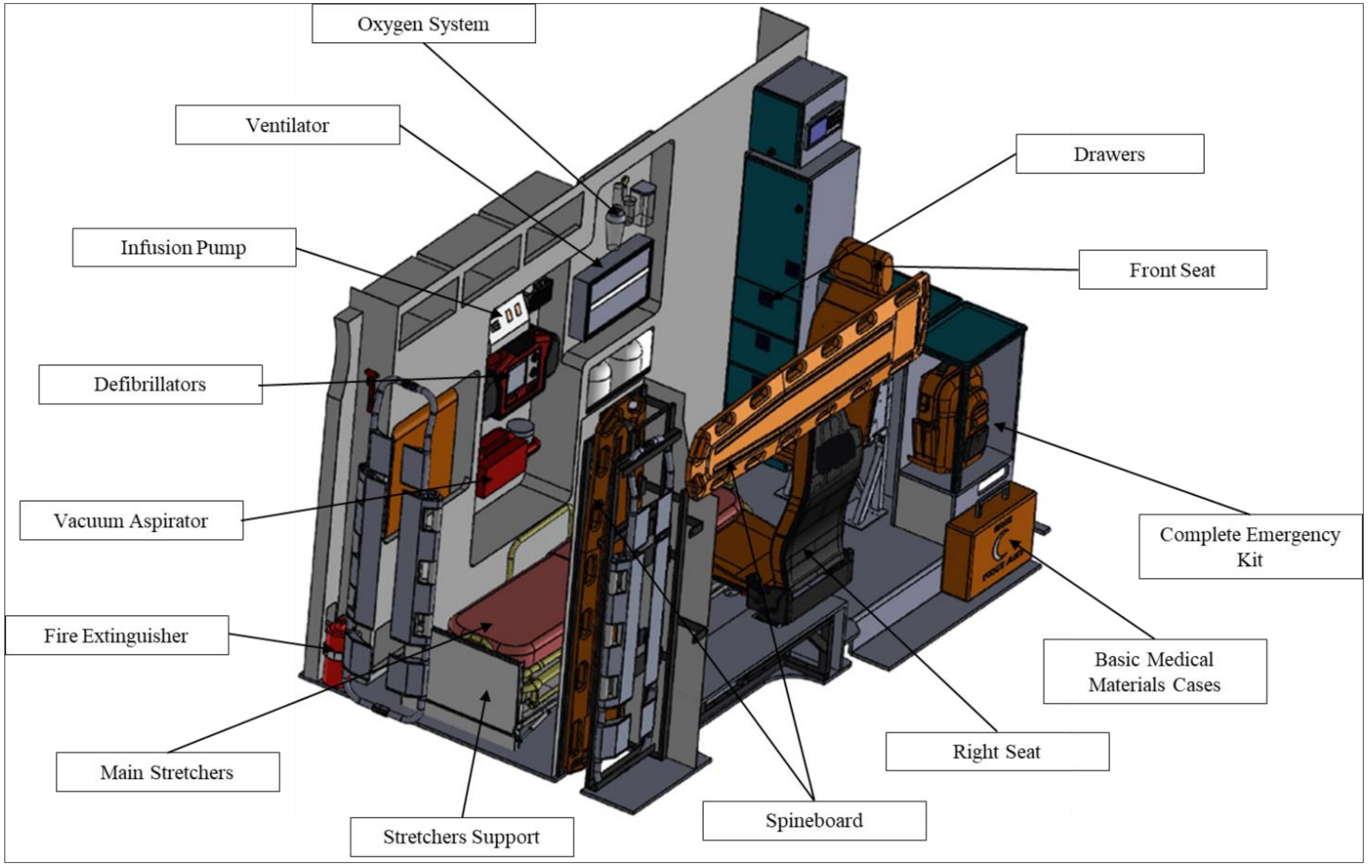

Figure 3.12. 3D view of fully equipped patient compartment

### 3.3.4. Exterior Preparation of Patient Compartment

In order to fixate a large and weighty patient compartment to sled in different directions, there should be some reinforcement and interconnections in the substructure of the vehicle. In parallel to the interior preparation of the test sample, frame structure and connecting surfaces under the original vehicle body should be prepared according to the sled and test fixtures dimensions (these dimensions are given in the fourth chapter). As well as, the pipe should be placed to the test sample doorframe in order to locate high-speed camera holders as shown in Figure 3.13. For carrying the sample on the test facility, four eyebolts should be placed to the roof structure in line with the dimensions of the test sample and overhead crane.

Figure 3.13. Patient compartment exterior preparation

While preparation is conducting, below-listed points should be taken into consideration;

- Strengthen the body, or the arrangement of the patient's compartment shall not lessen the normal deformation of the structure.
- Reinforcement in the subframe, chassis rails, chassis longitudinal box section for fixing the vehicle body to the test sled is allowed.
- Preparations should not have a negative or positive effect on the performance of interior components during testing.

### 3.4. Testing

According to EN 1789+A2, the dynamic test can be performed on the sled test facility. The test assembly shall be accelerated in the longitudinal, transverse and vertical directions in accordance with Figure 3.14. The dynamic testing acceleration curve is given between the high-g and low-g acceleration area of the graph given in Figure 3.14. The impact speed shall be between 30 km/h-32 km/h.

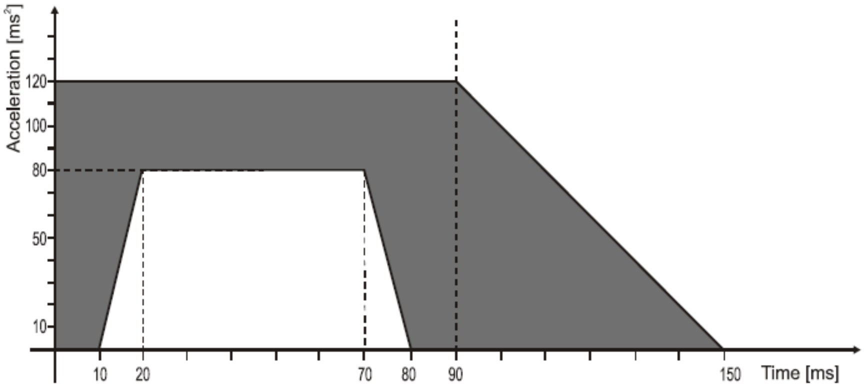

Figure 3.14. Acceleration impulse [38]

#### 3.4.1. Test Pulse Generation

Before performing the test with an actual test sample, several iteration shots are performed with dummy weight to obtain the target acceleration curve. In order to obtain the target acceleration curve (green line shown in Figure 3.15) within boundaries of the standard, the pulse should be generated before the test. In other words, the system is adjusted, with the help of the dummy mass, until the mandatory pulse has been reached. This usually requires 3-6 test iteration shots. For the ambulance tests, 2500 kg dummy mass, which approximately represents the total weight of the test sample is fastened to the sled during the test pulse creation process. Then, the parameters of the control unit of the sled's accelerator are configured with iterative adjustments until the desired target is successfully reached for these dummy mass. A sample final pulse (iterated pulse) generated at the end of the test runs is given in Figure 3.15. As a result, the catapult actuator can accelerate the test sled with a test sample in keeping with the pattern of the target signal.

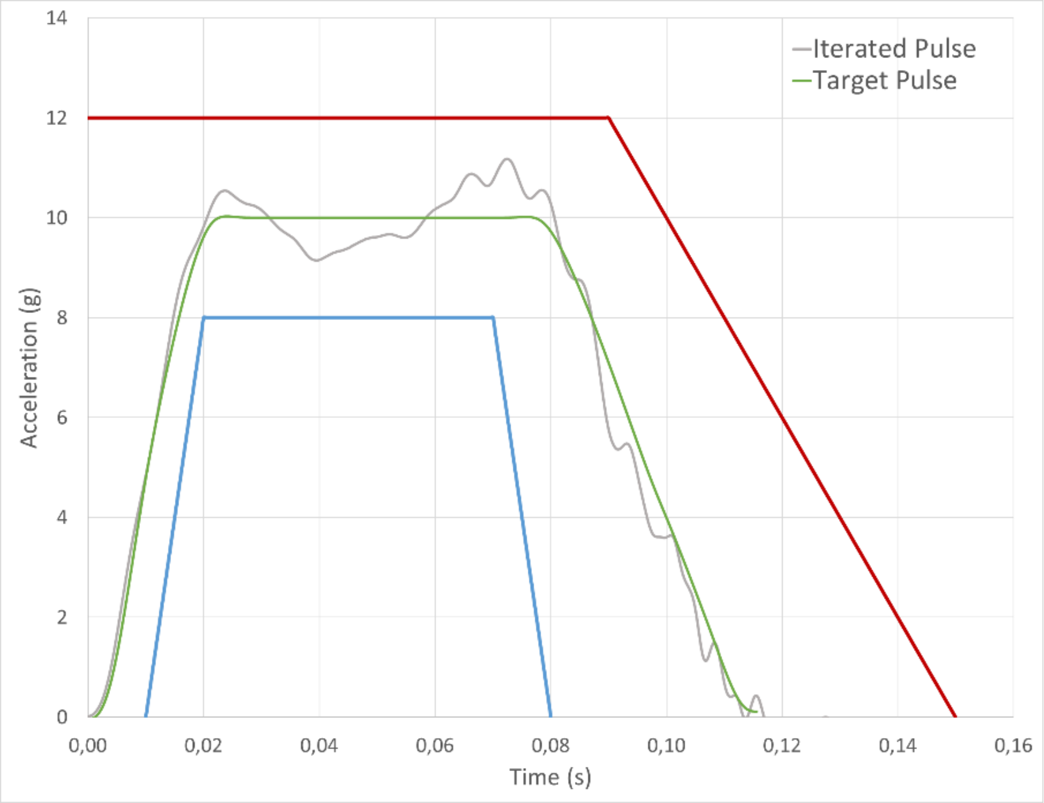

Figure 3.15. Target and iterated pulse generated before the actual test

## 3.5. Post Test Inspection and Evaluation

### 3.5.1. Post Test Inspection

After each test conducted in different directions, the inspection shall be carried out as specified below:

- The ambulance floor and test mass mounting hardware shall be inspected for evidence of material fracture and deformation.
- Equipment mounting device, system structure, and hardware shall be inspected for evidence of material fracture and deformation.
- The final location of the storage compartment’s door, drawer face, or the lid should be inspected and documented.
- When the storage compartment remains closed, it shall be checked after test whether or not the storage compartment can be opened.
- The inside and outside of the storage compartment shall be inspected for signs of visible deformation and fractures.
- The storage compartment interior surfaces, latch or locking assemblies, and hardware shall be inspected for evidence of material fracture and deformation.
- Any instances of deformation or fracture should be noted in the report with the photos for all inspected items.
- Parts ruptured, partially or fully detached from the equipment mounting device or system and other items should be documented with the photos and noted in the report.
- It should be inspected and reported if the actual test mass or representative test mass was retained in the substructure.
- The maximum travel distance shall be determined and reported for the stretcher and items attached to either the holding assembly or stretcher. The allowable maximum travel distance shall be 150 mm.
- The overall visual examination shall be conducted inside and outside of the patient compartment to determine if any sharp edges occurred after the test.
- Video record shall be reviewed for evidence of any item behave such as projectile.

In the patient compartment, exposed edges can be life-threatening during normal use of ambulance vehicle or in crash conditions, because exposed edges could come into contact with the occupant's hands, legs, head, etc. For those reasons, surfaces should be free of sharp edges and projections. In order to define the controlling method of sharp edges, whether it is sharp or not, first of all, it should be defined. A sharp exposed edge is an edge of rigid material having a radius curvature of not more than 2,5 mm according to Clause 4.5.1 of the EN standard [13]. The edges which occurred after each dynamic tests should be checked with radius test apparatus (r=2,5) in order to verify whether the radius of curvature is greater or equal to 2,5 mm.

### 3.5.2. Evaluation of Test Results

EN 1789+A2 Clauses 4.5.9 and 5.4 specify the acceptance criteria when the test sample subjected to acceleration/deceleration of 10 g in the different directions [13]. The main criteria of the EN standard are summarized below;

- The maximum travel distance by item or a person shall not be harmful.
- The probability of the projectile effect shall be eliminated by restraining all persons and interior objects.
- No items shall include sharp edges or endanger the safety of persons
- The stretcher or any item linked to the stretcher or its holding assembly shall not travel more than 150 mm. However, the maximum travel distance of the patient during the test may pass 150 mm.
- All persons in the road ambulance can be removed without the use of equipment that is not being carried in the ambulance.
- Cracks and tears of sheet metal are acceptable as long as the test mass shall remain fixed to the attachment point and no exposed sharp edge formed.

According to the above criteria, the pass-fail state of the test results should be determined. However, some of the criteria are not so clear; therefore, the overall approach of the EN standard, the severity of the incident and the injury risk of incident for occupants should be considered for evaluation of test results. In order to ease the evaluation process of the test results, the severity grading and further actions are defined in Table 3.2. The defined levels of severity grading are similar to the qualitative severity grading level of EN ISO 14971 (risk management standard of medical devices) [39]. In Table 3.2, five severity grading levels are defined according to the potential failure type of maintaining and fixation systems for the rear patient compartment of road ambulances and the main consequences of this failure. The relevant acceptance criteria and the main focus area of parts/components are summarized in Table 3.3. After the test is conducted, the test result should be evaluated according to Table 3.4, in order to designate the "pass" or "fail" state of the test result.

Table 3.2. Severity grading level

| **Severity Grading** | **Potential Failure Type of Maintaining And Fixation Systems** | **Further Actions** |
|---|---|---|
| Critical | Fully detach or fully rupture | The test result is not acceptable.<br>Further action shall be necessary (Retest preparation). |
| Major | Partially rupture or partially detach | The test result is not acceptable.<br>Further action shall be necessary (Retest preparation). |
| Serious | Fracture (crack, tear, etc.)<br>with sharp exposed edges occur | The test result is not acceptable.<br>Further action shall be necessary (Retest preparation). |
| Minor | Fracture (crack, tear, etc.)<br>with no sharp exposed edges occur<br>and no projectile potential | The test result is acceptable.<br>No further actions shall be necessary, |
| Negligible | Deformation<br>with no sharp exposed edges occur<br>and no projectile potential | The test result is acceptable.<br>No further actions shall be necessary, |

Table 3.3. Acceptance criteria and main focus area for components

| No | Item Name | Evaluation Criteria | Main Focus Area |
|---|---|---|---|
| 1 | Stretcher Fixation on the Vehicle Floor | EN 1789+A2 Clause 4.5.9, Clause 5.4 | Ambulance substructure and mounting hardware |
| 2 | Ambulance Equipment Mounting<br>and Medical Device | EN 1789+A2 Clause 4.5.9, Clause 5.4, Clause 6.3.5 | Equipment mounting, medical device fixation system, and load-bearing components |
| 3 | Furniture | EN 1789+A2 Clause 4.5.9, Clause 5.4 | Storage compartment and the closure device (door with track, hinges, or drawer guide) |
| 4 | Main Stretcher and Strecher Fixation System (1) | EN 1789+A2 Clause 4.5.9, Clause 5.4 and EN 1865-1 | Stretcher and Stretcher Fixation System |
| 5 | Test Analog/ Test Mass | EN 1789+A2 Clause 4.5.9, Clause 5.4 | Test mass |
| 6 | Whole Vehicle Van Shell | EN 1789+A2 Clause 4.5.9, Clause 5.4 | Ambulance patient compartment’s surface structure |
| 7 | Stretcher Support (2) | EN 1789+A2 Clause 4.5.9, Clause 5.4 and EN 1865-5 | Stretcher support |
| 8 | Seats and Head Restraint (3) | EN 1789+A2 Clause 4.5.9, Clause 5.4 | Seats, anchorages, mounting hardware, head restraint system |

**Notes:**

(1) Conformity assessment of “Stretcher Fixation System” is in the scope of EN 1865-1. According to manufacturing request, stretcher fixation system can be tested at the same time while "Stretcher Fixation on the Vehicle Floor" test is conducting according to EN 1789+A2. In the case of testing the “Stretcher Fixation System,” actual stretcher and dummy shall be used.

(2) Conformity assessment of “Stretcher Support” is in the scope of EN 1865-5. According to manufacturing request, stretcher support can be tested at the same time while "Stretcher Fixation on the Vehicle Floor" test is conducting according to EN 1789+A2. In the case of the testing stretcher, support evaluation shall be conducted according to EN 1865-5 and EN 1789+A2.

(3) Conformity assessment of seats, their anchorages, mounting hardware, head restraint system is not in the scope of EN 1789+A2. Permanent seats, seat belts anchorages, seat belts shall comply with other regulations. During the test ambulance, permanent seats, their components, head restraint shall be evaluated according to Clause 4.5.9 of EN 1789+A2.

Table 3.4. Test results evaluation table

| **Failure Type** | | **Severity Grading Level** | **Test Result** |
|---|---|---|---|
| Stretcher Fixation on the Vehicle Floor | Observable deformation on ambulance floor or mounting hardware | Negligible | Pass |
| | Fracture on ambulance floor or mounting hardware without exposed sharp edges occur | Minor | Pass |
| | Fracture on ambulance floor or mounting hardware with exposed sharp edges occur | Serious | Fail |
| | Ruptured or detached items from ambulance floor or mounting hardware | Major | Fail |
| | Fully detachment or rupture between the floor and mounting hardware | Critical | Fail |
| Furniture | Observable deformation of the storage compartment and/or the closure device (door with track, hinges, or drawer guide) | Negligible | Pass |
| | Fracture in the storage compartment and/or the closure device (door with track, hinges, or drawer guide) without exposed sharp edges occurs | Minor | Pass |
| | Fracture in the storage compartment and/or the closure device (door with track, hinges, or drawer guide) with exposed sharp edges occur | Serious | Fail |
| | Ruptured items from the storage compartment and/or the closure device (door with track, hinges, or drawer guide) | Major | Fail |
| | Fully detachment or rupture between storage compartment and/or the closure device (door with track, hinges, or drawer guide) | Critical | Fail |
| | The partially or fully detachment of drawers from locking mechanism | Critical | Fail |
| Medical Device Fixation | Observable deformation of the equipment mounting, medical device fixation system or load-bearing components | Negligible | Pass |
| | Fracture of the equipment mounting, medical device fixation system or load-bearing components without exposed sharp edges occurs | Minor | Pass |
| | Fracture of the equipment mounting, medical device fixation system or load-bearing components with exposed sharp edges occurs | Serious | Fail |
| | Ruptured or detached items in of the equipment mounting, medical device fixation system or load-bearing components | Major | Fail |
| | Fully detachment and rupture between equipment mounting, medical device fixation system or load-bearing components | Critical | Fail |

Table 3.4. (continued)

| Failure Type | | Severity Grading Level | Test Result |
|---|---|---|---|
| Stretcher Fixation | Observable deformation in stretcher assembly | Negligible | Pass |
| | Fracture in stretcher assembly without exposed sharp edges occurs | Minor | Pass |
| | Fracture in stretcher assembly with exposed sharp edges occurs | Serious | Fail |
| | Ruptured or detached items from stretcher assembly | Major | Fail |
| | Fully detachment and rupture from fixation system in the floor or stretcher support | Critical | Fail |
| | The maximum travel distance the stretcher and any item attached to either the holding assembly or stretcher is above 150 mm. | Critical | Fail |
| Test Mass | Observable deformation in test mass | Negligible | Pass |
| | Fracture in test mass | Minor | Pass |
| | Ruptured or detached items from test mass | Major | Fail |
| | Fully detachment and rupture from fixation system | Critical | Fail |
| Seats | Observable deformation on the seat assembly | Negligible | Pass |
| | Fracture on seat assembly without exposed sharp edges occurs | Minor | Pass |
| | Fracture on seat assembly with exposed sharp edges occurs | Serious | Fail |
| | Ruptured or detached items from seat assembly | Major | Fail |
| | Fully detachment or rupture of seat assembly from fixation points | Critical | Fail |
| Patient | Fracture on surfaces without exposed sharp edges occurs | Minor | Pass |
| | Fracture on surfaces with exposed sharp edges occurs | Major | Fail |
| | Ruptured items from surfaces | Critical | Fail |

# CHAPTER 4

# CURRENTLY USED TEST FIXTURE FOR DYNAMIC TEST

## 4.1. Introduction

The road ambulance patient compartment should be fastened to the sled test platform in different directions to verify the strength of mounting and fixation systems. For the longitudinal and transverse directions, there is no requirement for the special fixture to fastening the rear compartment body of an ambulance to a sled test platform. However, a test fixture is essential to fasten the fully-equipped patient compartment to the sled test platform in the vertical configuration (+z). This test fixture can be used only for the vertical configuration (+z) of the test sample while conducting a dynamic test. The road ambulance patient compartment coordinate system is shown in Figure 4.1. While testing in a vertical configuration, the z-axis of the ambulance rear compartment becomes parallel to the direction of movement, and it is fastened to the test fixture. Experience of METU-BILTIR Center Vehicle Safety Unit Test Engineers has shown that the fixture in the vertical direction is critical. The rigidity and strength of the test fixture are significant because it must remain attached to the sled with the test sample during the test. In this chapter, the currently used test fixture is modeled to perform FEA study for this particular fixture. The details of the currently used test fixture are given in the following sections.

## 4.2. Geometrical Modelling Process

Assembly of the currently used vertical test fixture is made according to the following sequence;

1. First of all, the main plate is fixed to the sled.
2. The test fixture is fixed to the back section of the main platform and sled.
3. The ambulance rear patient compartment is oriented and placed to the sled.

4. The ambulance rear patient compartment is connected to the vertical test fixture with fasteners.

The components generating for vertical configurations will be detailed in the following subsections. CATIA V5 is used to generate the geometrical model of the assembly.

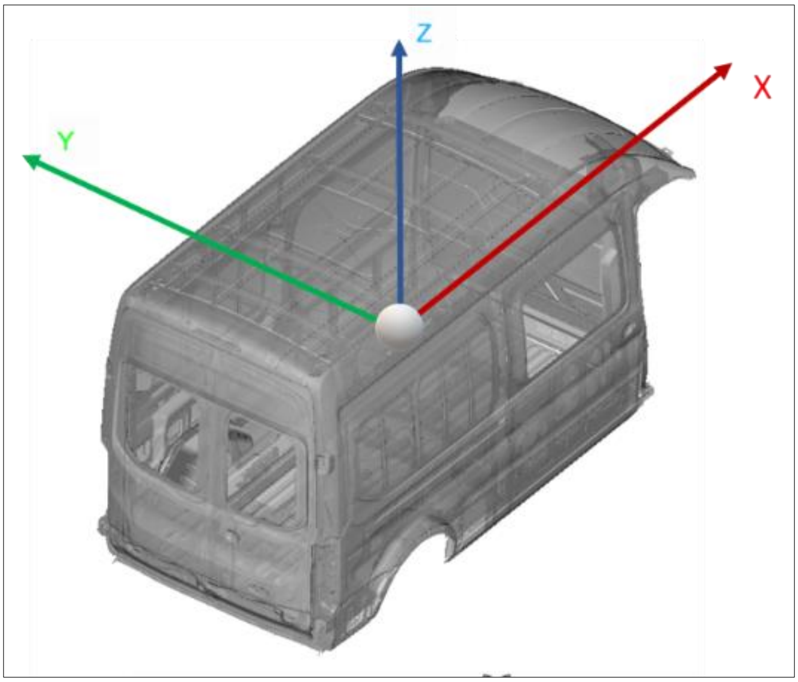

Figure 4.1. Defined coordinate system for patient compartment of vehicle

### 4.2.1. Sled

As shown in Figure 4.2, the sled is an essential part of the dynamic test platform on which the test fixtures are fastened. There are fastening locations for the test samples on the right side and left the side of the sled. Figure 4.3 shows the 3D CAD model of the sled. In addition, data acquisition systems for the sensors and the high-speed cameras are located in the front part of the sled.

### 4.2.2. Test Fixture and Main Plate

The vertical test fixture and the main plate are shown in Figure 4.2 and Figure 4.3. The main plate is used for all test directions while accelerating test samples in the longitudinal, transverse and vertical configuration; however, the vertical test fixture is designed specifically to assembly test samples in the +z direction. The primary purpose of using the main plate is to increase surface area and attachment points for connections. The vertical test fixture is made mainly by vertical plate (to connect ambulance rear compartment to fixture), horizontal plate (to connect the vertical structure to sled), “I” and “square profiles” for supporting as shown in Figure 4.5. Cross-sections of profiles are given in Figure 4.6 for square profiles and in Figure 4.7 for I-profiles. Plates and profiles are jointed by the welding process. M16 and M24 screws are used with different sizes of the bushing in order to secure the main plate and the vertical test fixture to the sled through attachment points. S355 structural steel is used for the main plate and the vertical test fixture.

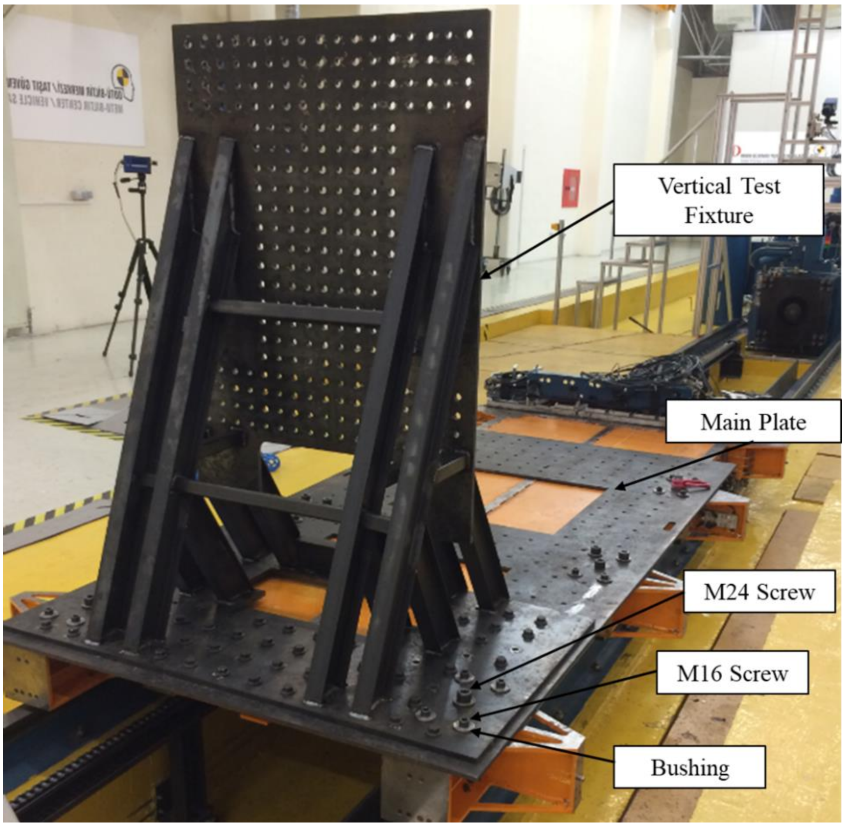

Figure 4.2. Actual vertical test fixture, main plate and sled

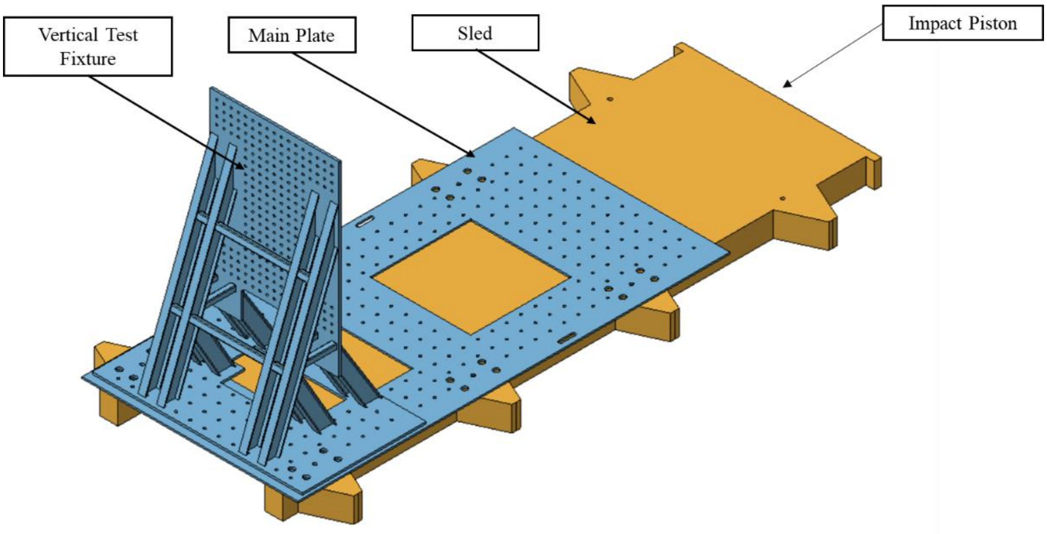

Figure 4.3. 3D models of vertical test fixture, main plate and sled

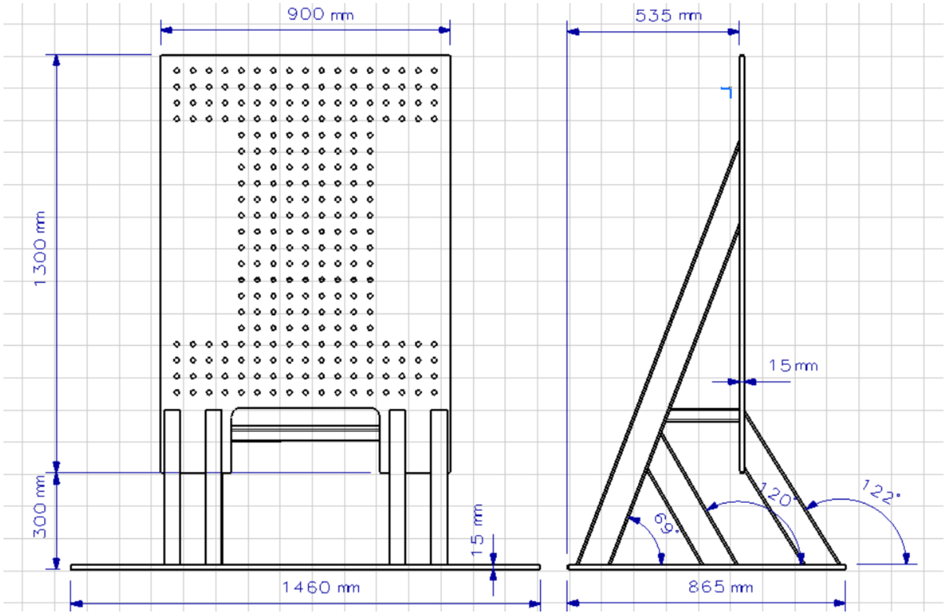

Figure 4.4. Dimensions of vertical test fixture

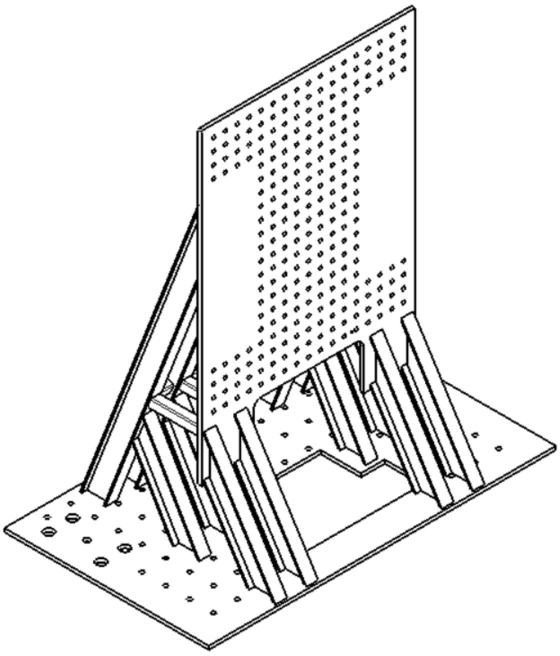

Figure 4.5. Isometric view of 3D vertical test fixture

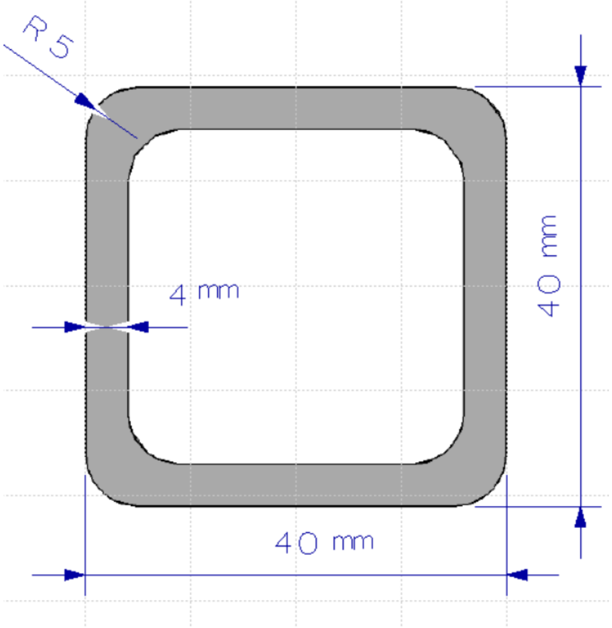

Figure 4.6. Cross section of 40 x 40 x 4 mm steel profile

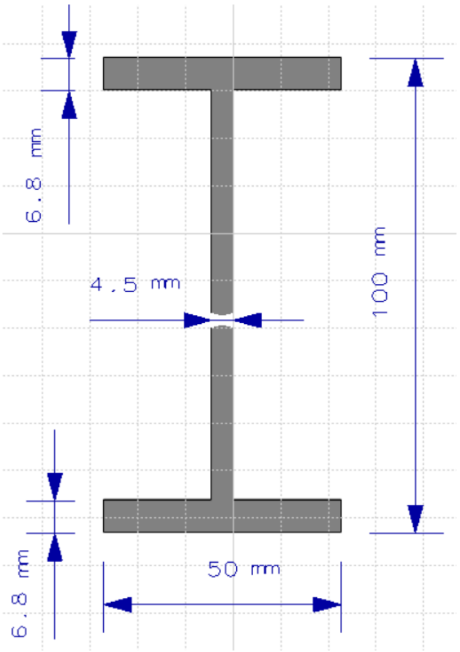

Figure 4.7. Cross section of I-beam steel profile

### 4.2.3. Rear Patient Compartment and Sub-Structure

According to the EN standard, while securing the ambulance patient compartment to the test platform, reinforcements from the subframe of the rear compartment or chassis rails or longitudinal box profile of the chassis are allowed [13]. While accelerating the test sample in the longitudinal and transverse directions, the only configuration that is shown in Figure 4.8 is sufficient. For the z-direction of the ambulance patient compartment, the vertical test fixture (Figure 4.5) is attached to the sled and fasten to the connecting plate with M16 screws. S355 structural steel is used for the connecting structure and the connecting plate. Details of the rear compartment model are given in Appendix A. The final configuration of the dynamic test assembly is shown in Figure 4.9.

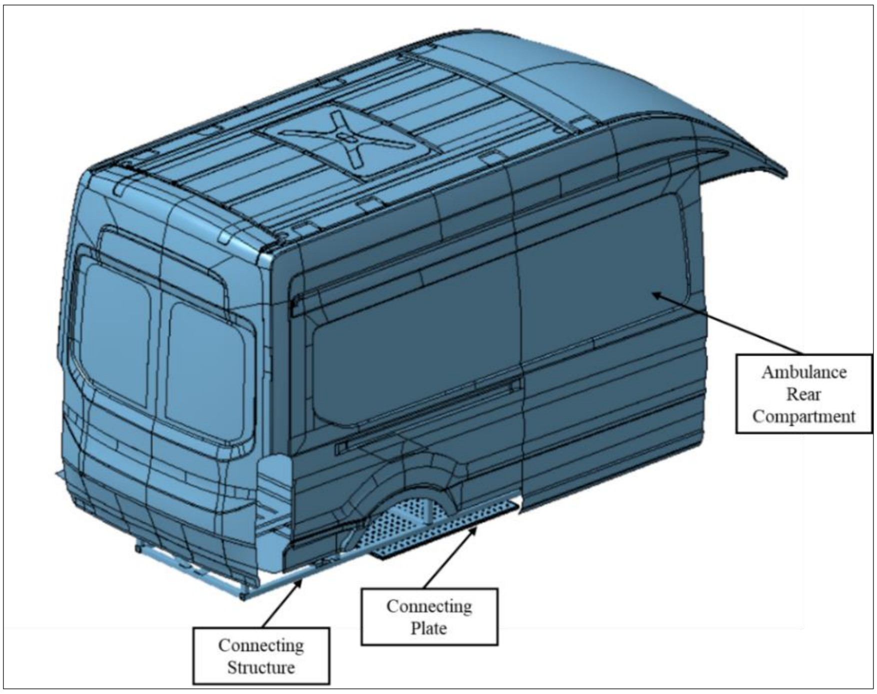

Figure 4.8. Rear patient compartment of road ambulance

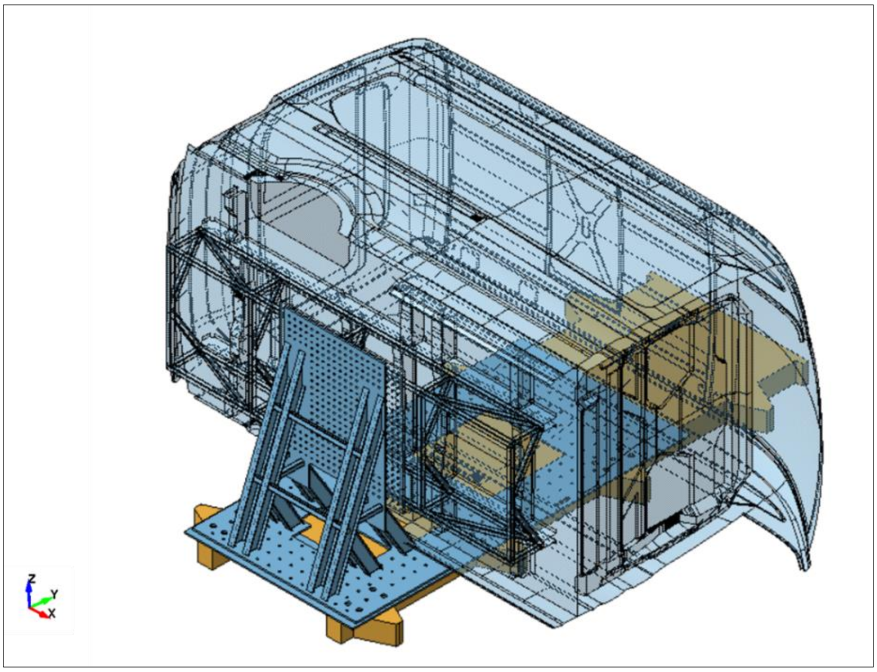

Figure 4.9. Assembly configuration of dynamic test

# CHAPTER 5

# ANALYSIS OF THE CURRENTLY USED TEST FIXTURE

## 5.1. Introduction

Computer-Aided Engineering (CAE) make a contribution to the improvement of product design, thus cost and time is considerably reduced in the product development stage. Finite Element Analysis (FEA) has a significant role in CAE by analyzing the defined models with solving partial differential equations numerically [40], [41]. FEA has an extensive application area such as structural analysis, fatigue and fracture mechanics, thermal analysis.

The model generation for finite element analysis begins with initially geometry modeling or importing geometry from computer-aided design software. In order to reduce the analysis time, and complexity of the model, complex geometries, sharp edges, small fillets, and chamfers, etc. are simplified and cleaned up for meshing. Then the representative model is discretized with appropriate mesh. Next, connections between parts, material properties, initial and boundary conditions are assigned in the pre-processing stage. After this phase, the primary program named “solver” is assigned to solve the equation laws of conservation of mass, momentum, energy, and entropy. In the last phase which named as post-processing, the resulting data related to deformations, stress, strain, velocities, accelerations, forces, moments, energies are acquired. The summary of the FEA process is given in Table 5.1. The implementation of this process for the vertical test configuration is given in this chapter.

There are many available commercial FEA software, which supplies analysis capabilities by using the finite element method. In this study, LS-DYNA, which is a general-purpose finite element program that is capable of simulating complex problems using explicit time integration, has been utilized [42]. Also, LS-PrePost-4.6

has been utilized for the preparation of a mathematical model and reviewing simulation results in the post-processing stage.

Table 5.1. FEA process [37]

| | |
|---|---|
| Pre-Processor | ▪ Initial Geometry<br>▪ Connections<br>▪ Material Description<br>▪ Initial and Boundary Condition |
| Solver | Conservation Equation<br>▪ Mass<br>▪ Momentum<br>▪ Energy<br>▪ Entropy<br>Material Model<br>▪ Stress-Strain Relation<br>▪ Equation of State<br>▪ Failure Criterion<br>▪ Post-Failure Mode |
| Post-Processor | ▪ Deformation, Stress, Strain, Pressure<br>▪ Velocities, Accelerations<br>▪ Forces, Moments<br>▪ Energies |

## 5.2. Units

While modeling with Ls-Dyna, various unit systems can be used if units are consistent. The units used for this study are given in Table 5.2.

Table 5.2. Units used in the finite element analysis

| | |
|---|---|
| Length | mm |
| Time | s |
| Mass | ton |
| Force Unit | N |
| Stress | MPa |
| Energy | N.mm |
| Velocity | mm/s |
| Acceleration | mm/$s^2$ |

## 5.3. Governing Equations and Integration Scheme

For a different type of application, both explicit and implicit time step schemes can be managed by LS-DYNA. Explicit time step schemes are used to analyze for highly nonlinear behaviors of structures, including;

- Complicated contact conditions
- Large deformations
- Non-linear material behaviors

Explicit integration is also preferred for dynamic problems which the responses are highly affected by mass inertia and damping. The explicit solver is preferred for simulating such dynamic problems because convergence problems might occur during using implicit solver [43]. Considering that the governing equations of motion, also known as the dynamic equilibrium equation, is given Equation (5.1) [42];

$$M\ddot{U} + C\dot{U} + R_{int}(U) = R_{ext} \tag{5.1}$$

where;

$[M] = \ Mass\ Matrix$

$[C] = \ Damping\ Matrix$

$[\ddot{U}] = \ Global\ Nodal\ Acceleration\ Vector$

$[\dot{U}] = \ Global\ Nodal\ Velocity\ Vector$

$[U] = \ Global\ Nodal\ Displacement\ Vector$

$R_{int} \ = Internal\ Force\ Vector\ (R_{int} = KU\ for\ linear\ elastic\ system)$

$R_{ext}$ = External Force Vector

To integrate the equation of motion, which is given in Equation (5.1), the explicit central difference integration scheme is using in LS-DYNA [42]. By using Equation (5.1) the equations of motion at time n can be written in the form of ;

$$\ddot{U}^n = M^{-1}\left(R_{ext}^n - C\dot{U}^n - R_{int}^n\right) \tag{5.2}$$

By using the central difference method, first and second derivative of the displacement, U can be represented by Equations (5.3) and (5.4);

$$\dot{U}^n = \frac{1}{2\Delta t}\left( U^{(n+1)} - \ U^{(n-1)} \right) \tag{5.3}$$

$$\ddot{U}^n = \frac{1}{(\Delta t)^2}\left( U^{(n+1)} - 2U^n + \ U^{(n-1)} \right) \tag{5.4}$$

Then, by using Equations (5.3) and (5.4), at time n+1, a displacement equation can be gathered as;

$$U^{(n+1)} = U^{n} + \dot{U}^{(n+1/2)}\Delta t \tag{5.5}$$

where;

$$\dot{U}^{(n+1/2)} = \dot{U}^{(n-1/2)} + \ddot{U}^{(n)}\Delta t \tag{5.6}$$

As a result, geometry can be updated by adding the calculated displacement increments (at time $n + 1$) to the initial geometry.

$$X^{n+1} = X^{0} + U^{n+1} \tag{5.7}$$

where;

$X^{n+1}$ : current state variable

$X^{0}$: initial geometry

Mass matrix [M] indicate the mass distribution within a system. The mass matrix can be represented with two formulations in the finite element problems [44]:

- Consistent Mass Matrix
- Lumped Mass Matrix

Consistent Mass Matrix includes diagonal and off-diagonal terms with the difference of Lumped Mass Matrix. However, off-diagonal terms make the calculation very intensive for that reason Diagonalization of the mass matrix is very significant to solve dynamic equilibrium equations efficiently.

There are many advantages to use diagonalization, for example, structure mass matrix [M] can be easily structured from the element mass matrix, and inversion of mass matrix $[M]^{-1}$ can be calculated very quickly, in addition, diagonalized matrix is beneficial to preserving storage space, because it can be stored as a vector [44].

For that reason, most of the explicit finite element codes prefer to use a lumped matrix which results in a diagonal matrix. This matrix is also called a "*lumped mass matrix*" [44]. For lumped mass [M]:

$$[M_{nxn}] = \begin{bmatrix} \sum_{i=1}^{n} m_{1i} & & \\ & \sum_{i=1}^{n} m_{2i} & \\ & & \sum_{i=1}^{n} m_{ni} \end{bmatrix} = \begin{bmatrix} m_1 & & \\ & m_2 & \\ & & m_n \end{bmatrix} \tag{5.8}$$

Inversion of diagonal matrices [M] is trivial:

$$[M^{-1}] = \begin{bmatrix} {}^{1}/_{m_1} & & \\ & {}^{1}/_{m_2} & \\ & & {}^{1}/_{m_n} \end{bmatrix} \tag{5.9}$$

There are few essential issues such as time step size that are critical to the explicit scheme. For the explicit integration scheme, time steps shall not be bigger than the time needed for the acoustic wave to go through the element [44]. If the time step is very small, the analysis will require too much computational time, on the other hand, if the time step is too large, the solution might fail due to divergence. Thus it is well realized that the explicit approach is conditionally stable and has to satisfy the Courant-Friedriches-Levy condition on time step size [45].

$$\Delta t_{cr} = \frac{L_{min}}{c} \tag{5.10}$$

where

$$c = \sqrt{\frac{E}{\rho}} \tag{5.11}$$

$L_{min}$ is the smallest characteristic length of all the elements, and c is the speed of sound in the material, $\rho$ is the density, and E is Young's modulus. The expression differs depending on if solid, shell, or beam elements are used.

LS-DYNA settle a new time step size by taking the minimum value over all elements [42].

$$\Delta t^{n+1} = a.min\{\Delta t_1, \Delta t_2, \Delta t_3, \ldots, \Delta t_N\} \quad (5.12)$$

Where N is the number of elements, $\Delta t$ is the time step, and $a$ is the time step scale factor. In this study, the default value of time step scale factor (0.9) is used. The scale factor provides that time step is always %10 below the critical value.

Generally, the increase in time step as much as possible is needed in order to avoid the long simulation duration; the maximum reasonable time step can be achieved with the usual method named "mass scaling" (artificially increasing the mass of the element) [43]. Since the mesh of the parts is consistent, artificial mass needs to be added to elements in order to increase the time step and to decrease computational time.

### 5.4. Finite Element Model Creation

In this study, the test platform (including sled, main plate, vertical test fixture, etc.) the model is generated starting from the 3D CAD model of each part. All of the geometry utilized to develop the FE model is created in the CAD design program of CATIA V5. Then the preprocessing phase is conducted in two complementary steps. In the first step, the CAD model that is generated in CATIA V5 software is imported to MSC. Apex Grizzly as a step file in order to create mid-surface and meshing. The solid structure is modeled with 2D, and one dimension of the structure is lost; however, in order not to neglect actual structure behavior, this dimension is to be the thickness of the 3D structure as a property. MSC. Apex Grizzly defines this thickness such that the two-dimensional finite elements supposed to be in the middle of the actual 3D element; thus, the 2D finite element generates the symmetry plane of the three-dimensional elements. In the second step, material description, initial and boundary conditions, contact definitions, and other pre-process arrangements about the model is created to get the final FE model in LS-PrePost-4.6. All parts of the vertical assembly and their main belonging groups are listed in Table 5.3.

Table 5.3. Parts for FE model

| | |
|---|---|
| I. Group | ▪ Sled<br>▪ Main Platform<br>▪ Vertical Fixture<br>▪ Supports |
| II. Group | ▪ Connecting Structure<br>▪ Connecting Plate<br>▪ Ambulance Rear Compartment |

FE model development for the parts belongs to the first group is given in Figure 5.1, and Figure 5.2. Sled, Main Plate, and Vertical Fixture are modeled as plates. Therefore, plate-like structures are considered to simplify the solution. Four-node reduced integrated elements (2D) are used due to its calculations are quicker than others. The whole model consists of Tri and Quad shaped elements. For supporting components, other structural solid type elements are defined in the form of reduced integrated eight-node hexahedral solid (3D) elements. In order to lessen the computational time, bolted connections are not modeled, two-node beam elements Hughes-Liu [42] are used instead of bolt model by representing bolt diameter.

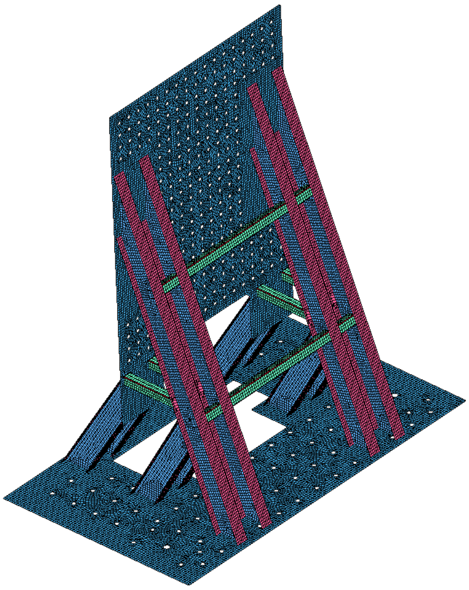

Figure 5.1. FE model of the currently used test fixture

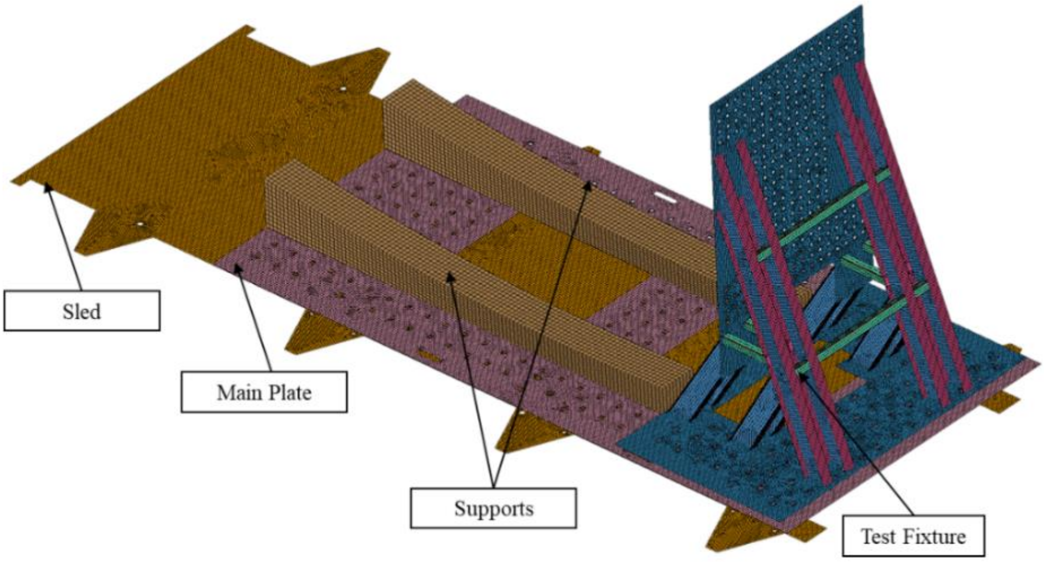

Figure 5.2. FE model of the vertical test assembly configuration

FE model development for the parts belongs to the second group is given in Figure 5.3. The ambulance vehicle rear body and connected parts are modeled as plates. Therefore, plate-like structures are considered to simplify the solution. Four-node reduced integrated elements are used due to its calculations are quicker than others. The whole model consists of Tri and Quad shaped elements. Parts of assembly are connected to each other with nodal rigid bodies.

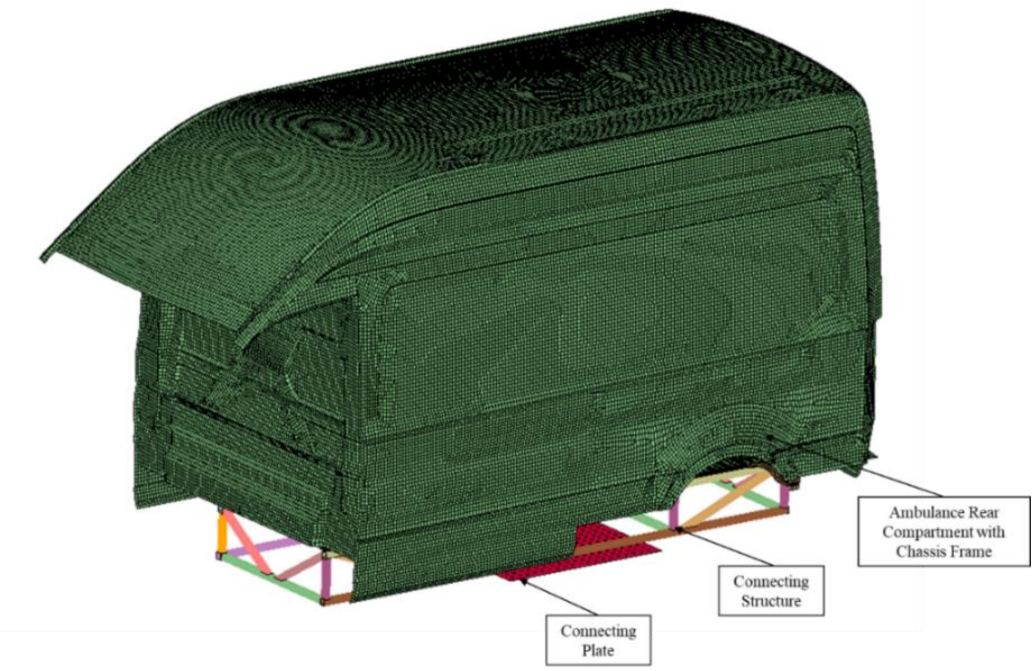

Figure 5.3. FE model of the patient compartment

All the parts should be linked together to generate the whole model after the meshing process of the whole model is ended. In the test platform, there are bolt connections at a different location in order to connect the main platform and the vertical fixture to the sled, as well as connect to the ambulance rear compartment to the vertical test fixture. Two node beam elements (Hughes-Liu) are used to create bolt connections as shown in Figure 5.4. By using CNRB (Constrained Nodal Rigid Body), all the nodes on the edge of a hole are retained in all six degrees of freedom to a point representing the center of the hole using in LS-DYNA.

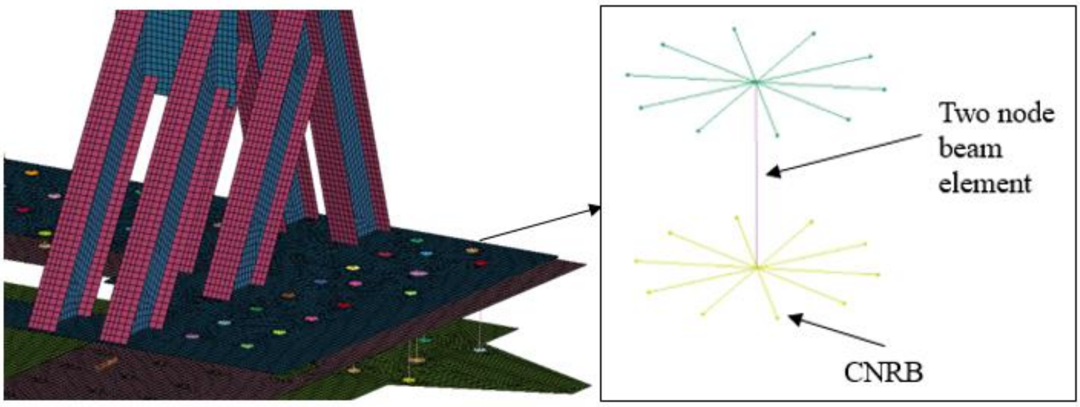

Figure 5.4. FE model for connections

The final model for the vertical test configuration is built by connecting all individual parts together. The finite element model of the vertical test assembly is given in Figure 5.5.

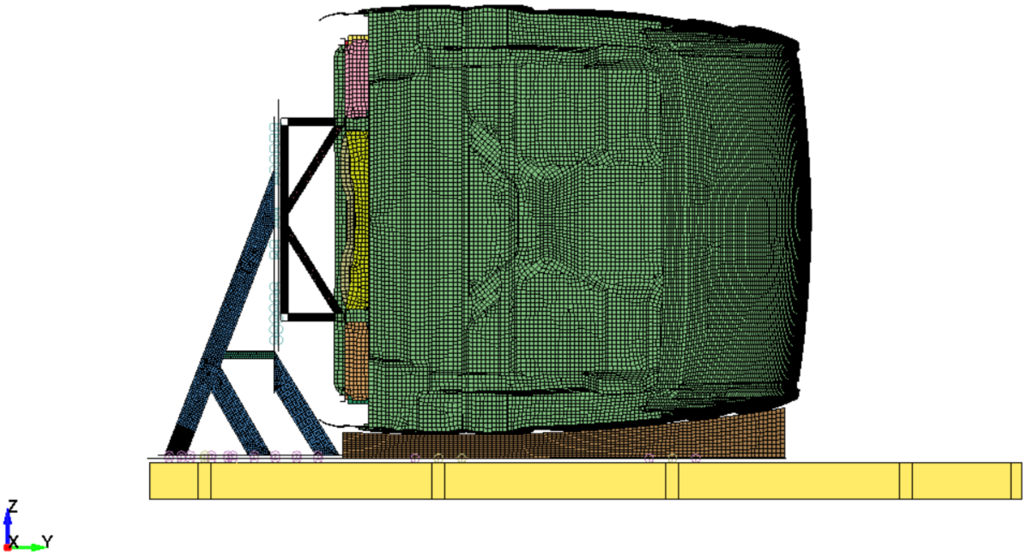

Figure 5.5. Complete FE model for vertical test assembly

### 5.4.1. Material Properties

This section describes all material models and material properties used in the FE model of the whole model. S355 steel is used for the parts like vertical test fixture, main plate, connecting structure, and connecting plate for the actual fixture. While the dynamic event of crash testing, some of the materials in the fixture may undergo plastic deformation and these type of materials can be modeled by using the elastoplastic material model. For these kinds of materials, true stress and true strain relation are used to define the plastic portion of the curve as an input to the material model. In the simulation, this type of property is used for most of the structural parts of the model, which might show elastic, plastic behavior during a dynamic event. In the scope of this study true stress and strain diagram for steel is given in Figure 5.6.

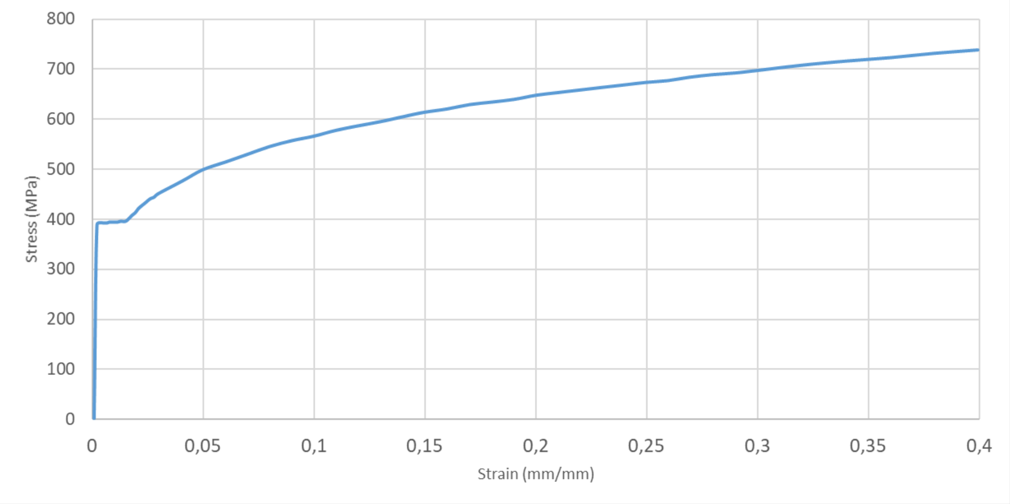

Figure 5.6. True stress and true strain curve for S355 [46]

In the simulation, the movement and transmission of the moment are of interest and not stress and strain in the ambulance rear compartment itself; thus the material properties are simplified, and a linear elastic material model is chosen as a sufficient material. Also for bolt connections, a linear elastic material model is chosen. In the test, inclined wood supports are using for the lateral surface of the rear compartment in the vertical test configuration. Additionally, in such dynamic simulations where there are high velocities in a short period, strain rate effects should be taken into account. For vertical text fixture, a piecewise linear plastic material model is implemented with LS-DYNA MAT-24. Strain rate defined for using the Cowper-Symonds model, which scales the yield stress with the factor [47];

$$\sigma_y = \left[1 + \left(\frac{\dot{\varepsilon}}{C}\right)^{1/p}\right] . \sigma_0 \tag{5.13}$$

$\sigma_0$ is the initial yield stress, $\dot{\varepsilon}$ is the strain rate, C and p are the Cowper-Symonds strain rate parameters. For these strain rate parameters C=40.4 $s^{-1}$ and p=5, which are most commonly utilizing parameters for steel in the engineering field, defined by Cowper and Symonds is taken as a reference for defining strain rate in the model [48].

Table 5.4. Summary for material properties [46, 49, 50]

| **Name of Parts** | **E (MPa)** | $\boldsymbol{v}$ | $\boldsymbol{\rho}$ **(ton/mm^3)** | $\boldsymbol{\sigma_y}$ **(MPa)** | **Plastic Strain at Failure (mm/mm)** |
|---|---|---|---|---|---|
| Main Plate | 210.000 | 0.3 | 7.85e-9 | 393 | 0.4 |
| Vertical Test Fixture | 210.000 | 0.3 | 7.85e-9 | 393 | 0.4 |
| Connecting Plate | 210.000 | 0.3 | 7.85e-9 | 393 | 0.4 |
| Connecting Structure | 210.000 | 0.3 | 7.85e-9 | 393 | 0.4 |
| Bolt | 210.000 | 0.3 | 7.85e-9 | - | - |
| Supports | 11.370 | 0.32 | 5e-10 | 46.8 | - |

### 5.4.2. Load and Boundary Conditions

The sled is attached to the floor of a catapult system at the slider rails. The floor of the sled is constrained in space in the transverse and vertical direction, and the acceleration pulse applied to sled and gravity loads are applied to all other parts. Since the sled is supposed to be move-in acceleration direction, it is right, and left edge nodes are a constraint in x, z, Rx, Ry, Rz direction in accordance with real test setup. Enforced motion is applied to the front face of the sled, which the impact piston accelerates the contacting test sled together with the test setup in compliance with the acceleration characteristics. The sled initially is not moved in the longitudinal direction on the rails which are located the bottom of the sled. Gravitational force is given for all parts in a negative z-direction as 9.81 m/s$^2$. Initial and boundary conditions are given in Figure 5.7. When the defined acceleration characteristic is applied by the system through the impact piston, the sled is triggered by the acceleration pulse diagram. For the so-called vertical test, the sled is propelled that, during the test it total velocity change $\Delta v$ is 30-32 km/h and its acceleration curve is called target acceleration (10 g) given between high-g and low-g acceleration area of a graph given in Figure 5.8 and Figure 5.9.

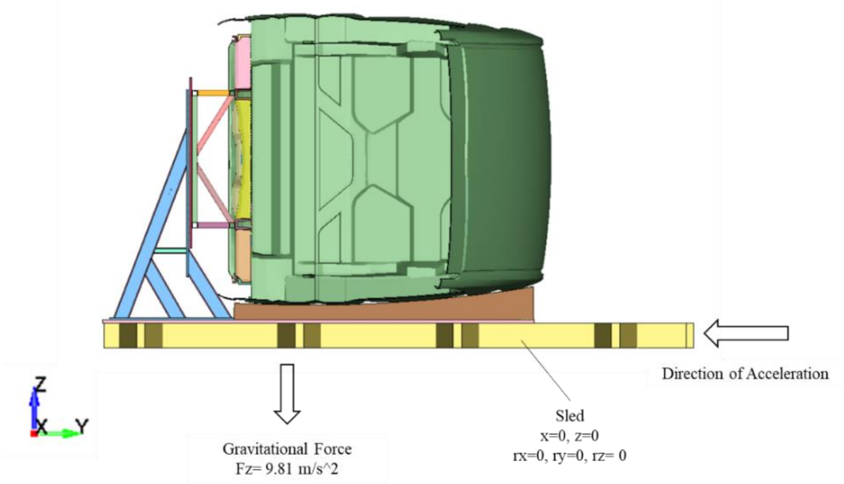

Figure 5.7. Initial and boundary conditions

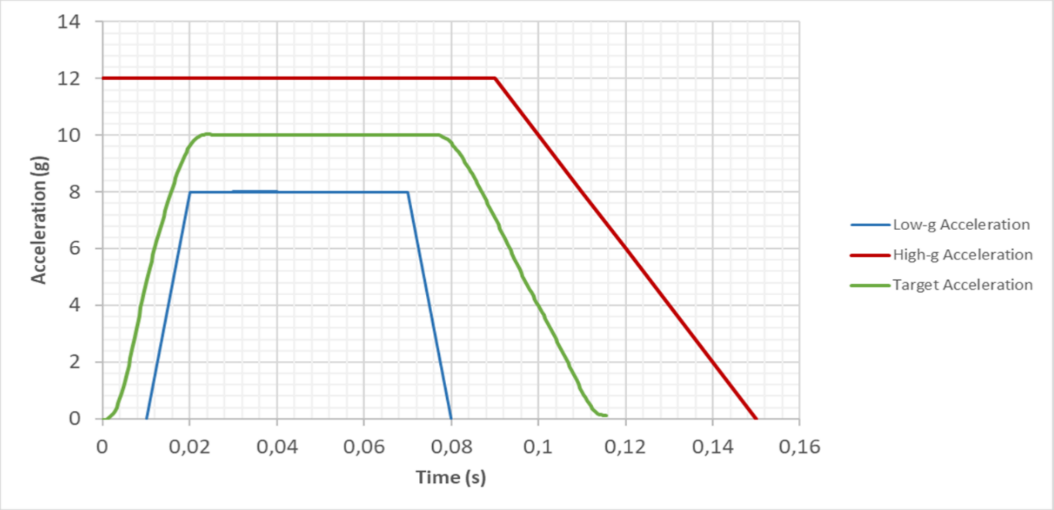

Figure 5.8. Acceleration corridor and target acceleration

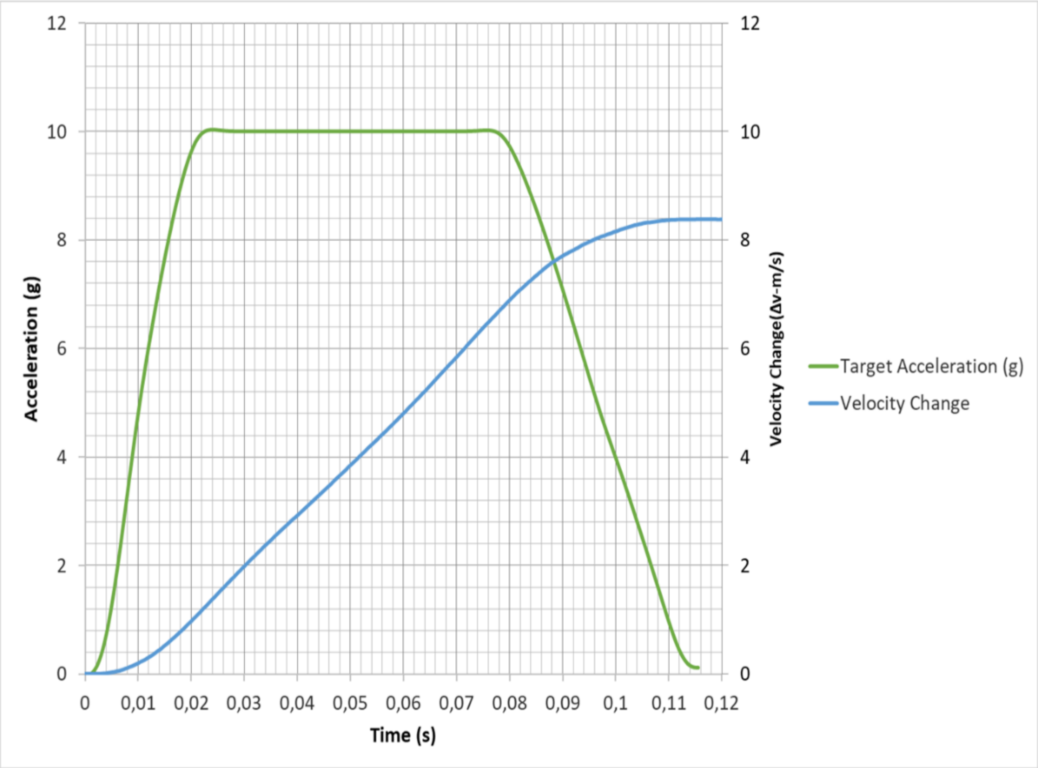

Figure 5.9. Target acceleration and velocity change

According to Figure 5.9, the time period is limited to 120 milliseconds due to the enforced motion are applied in this period. In the real test condition, deceleration is applied by the brake system of the sled test platform after the acceleration period ended.

### 5.4.3. Termination Time for the Analysis

The most significant duration of the test is within the period when the acceleration motion is performed. There is no requirement to analyze the motion further after the acceleration impulse converges to zero. As a result, the period that will be considered is from 0 to 120 milliseconds time period. In order to have successful analysis results, one-millisecond incremental periods are chosen.

## 5.5. Simulation Results

FEA results of the model are given in Figure 5.10 by 10 ms time intervals.

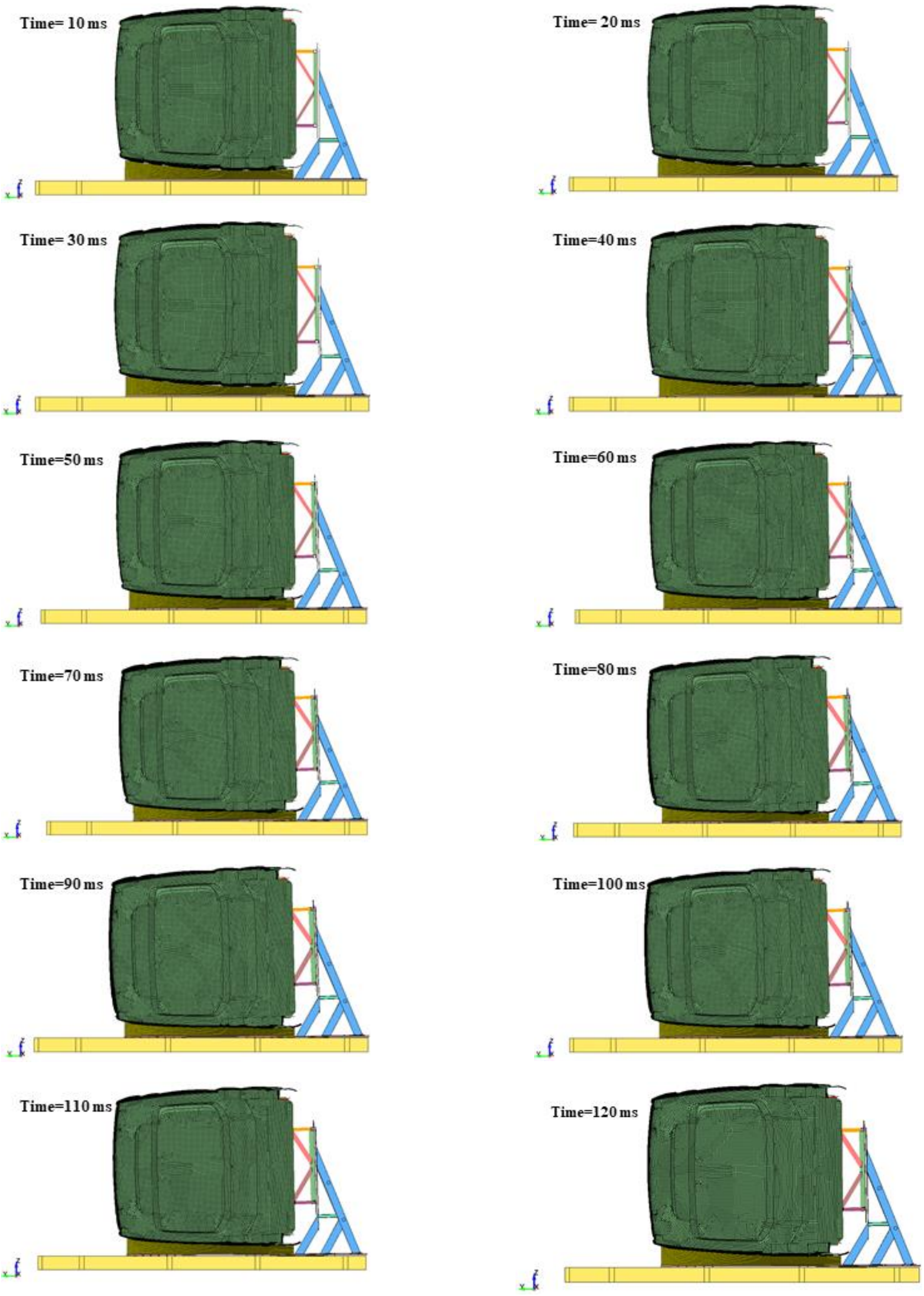

Figure 5.10. FEA results of the whole model in different time intervals

Von-Mises stresses are calculated and given with ten milliseconds time intervals for all parts of the vertical test fixture during the simulation, as shown between Figure 5.11 to Figure 5.17.

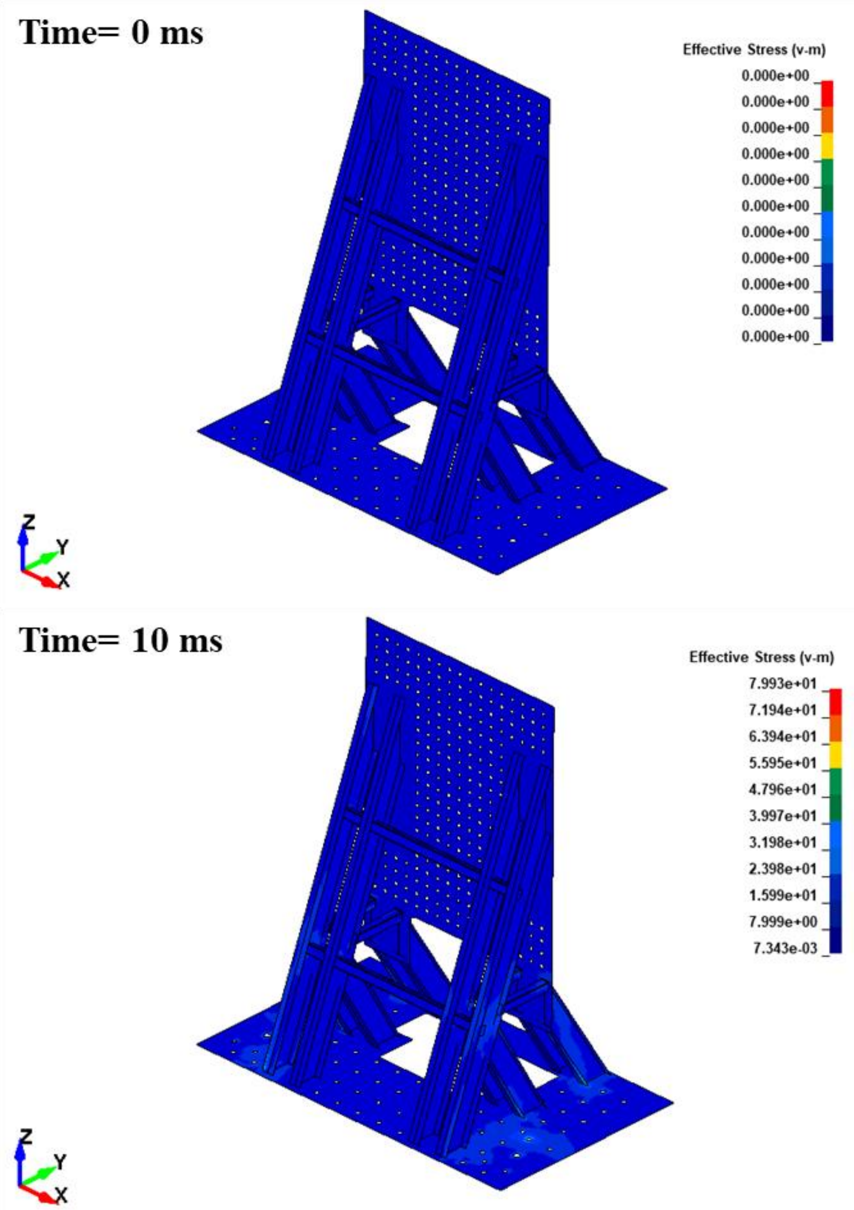

Figure 5.11. Von Mises stress representation of the fixture at 0 and 10 ms

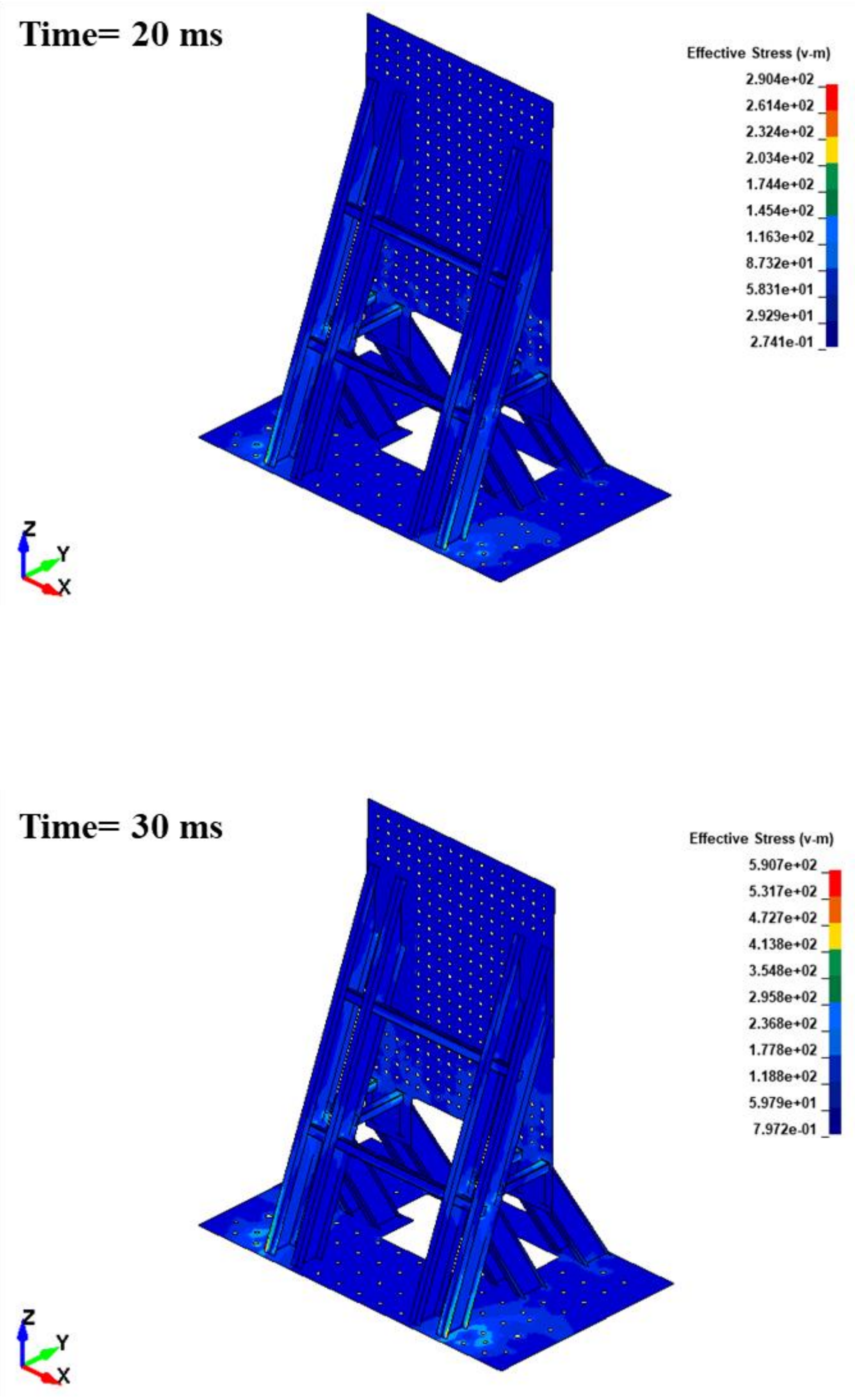

Figure 5.12. Von Mises stress representation of the fixture at 20 and 30 ms

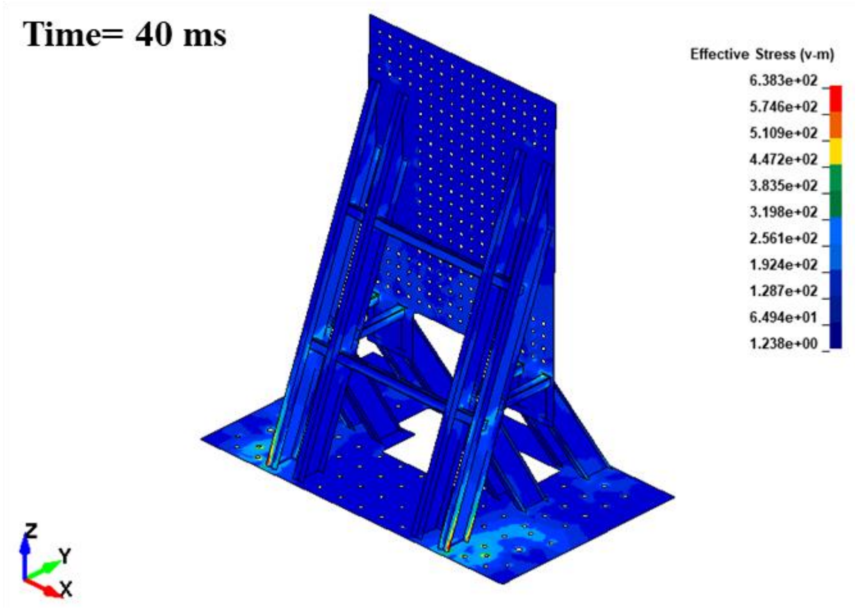

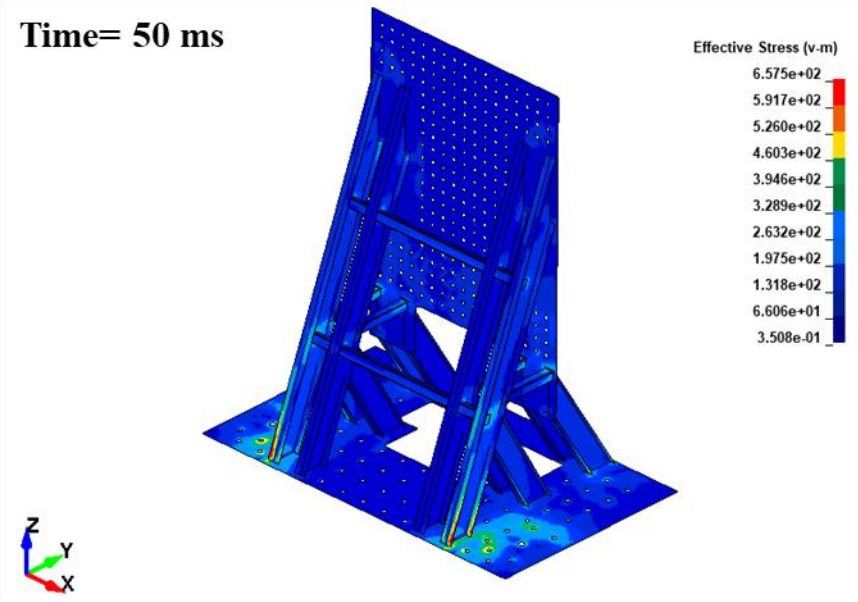

Figure 5.13. Von Mises stress representation of the fixture at 40 and 50 ms

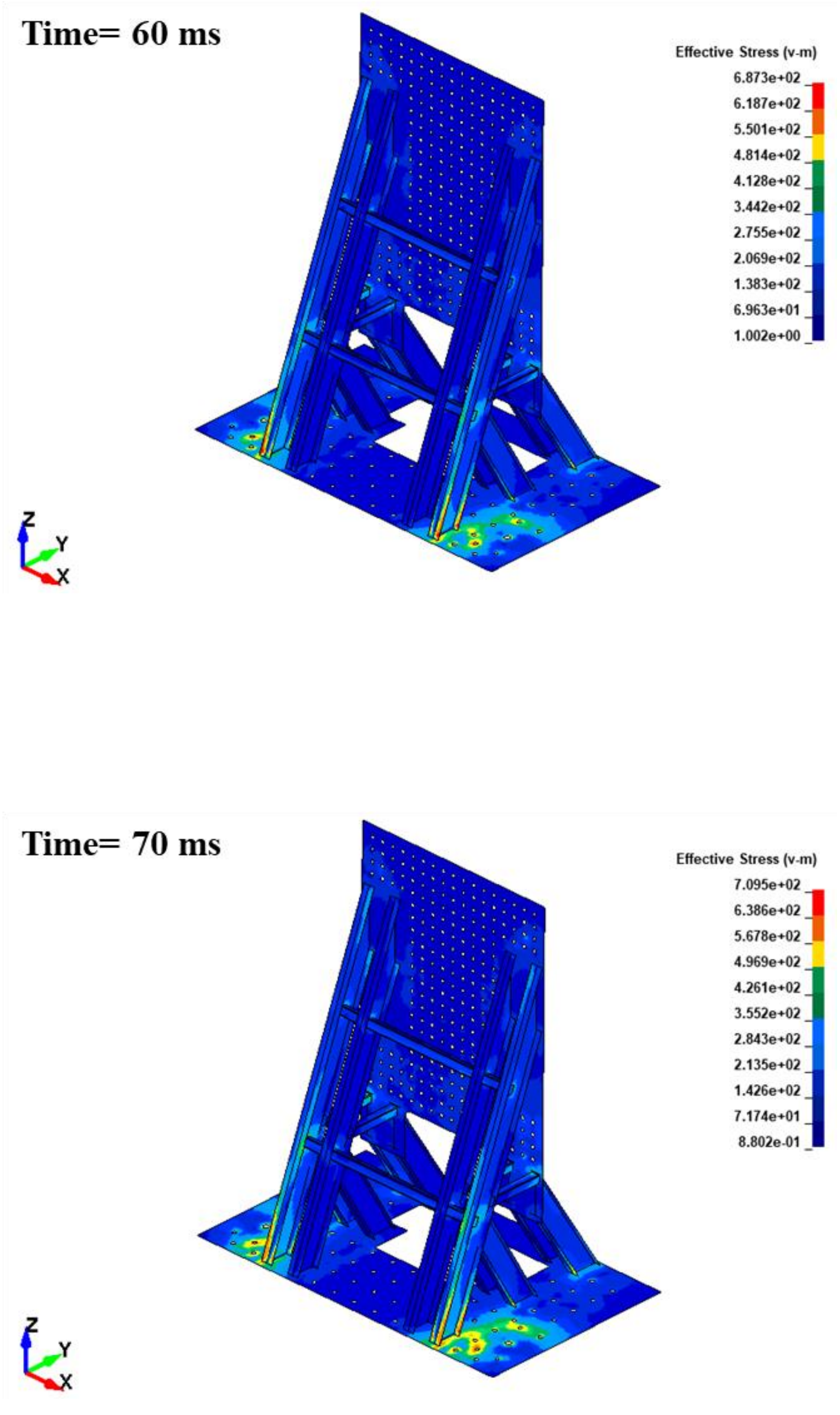

Figure 5.14. Von Mises stress representation of the fixture at 60 and 70 ms

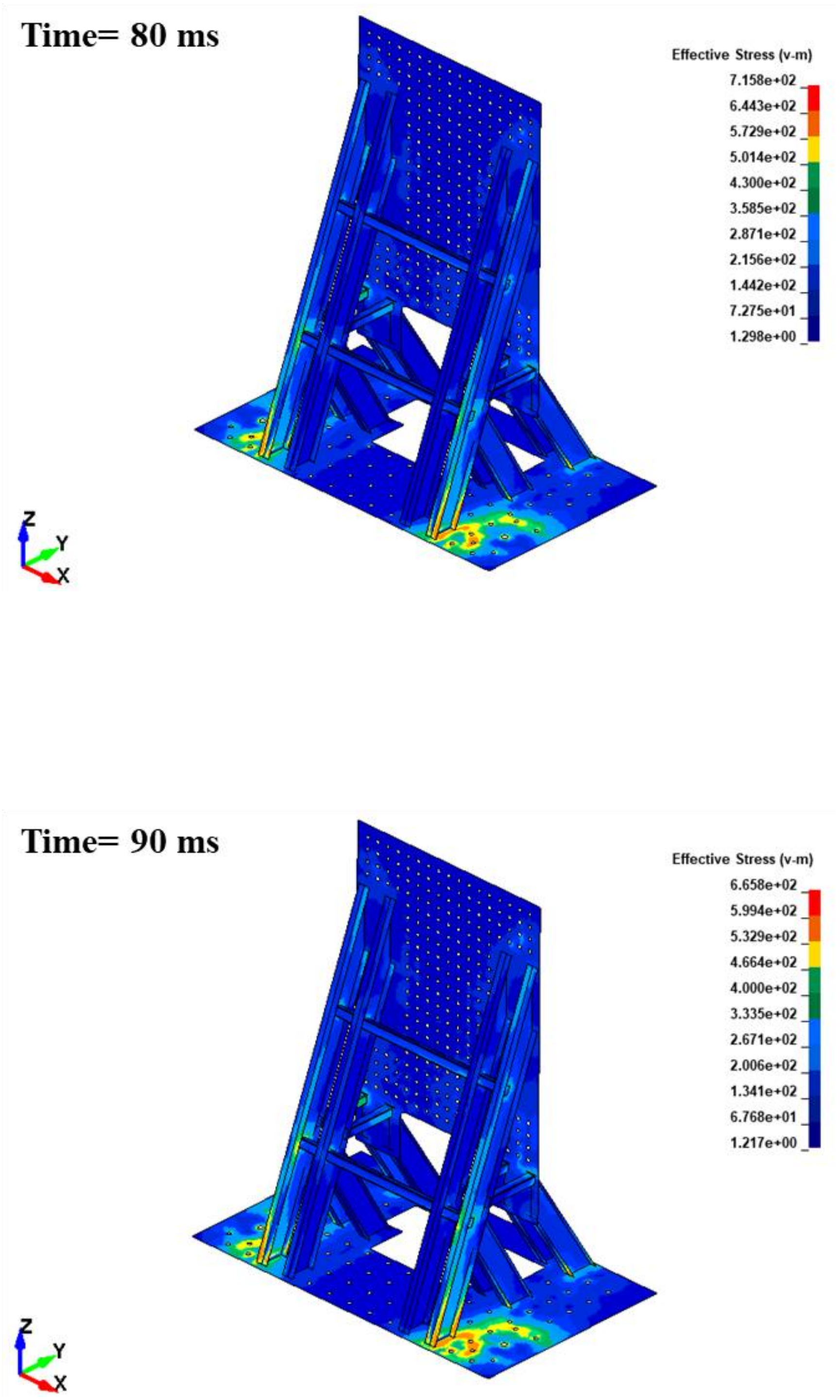

Figure 5.15. Von Mises stress representation of the fixture at 80 and 90 ms

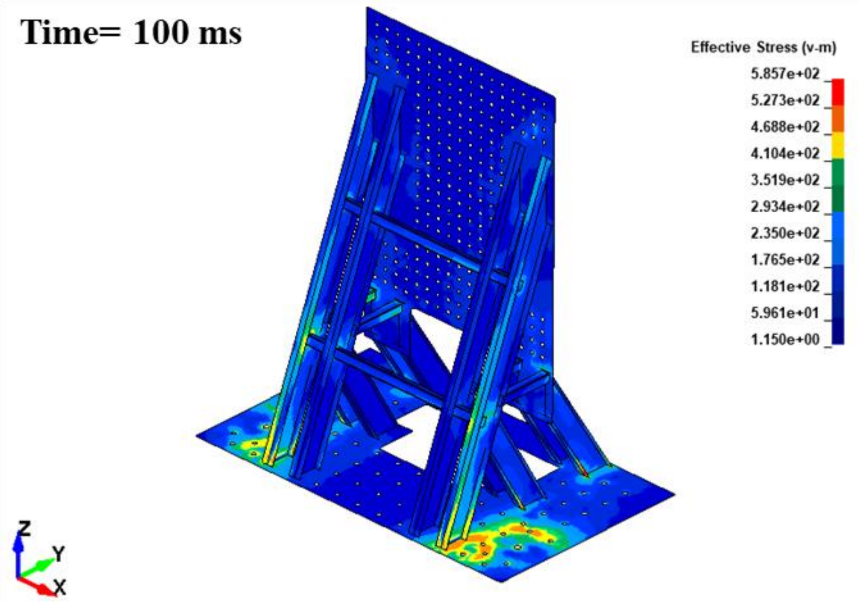

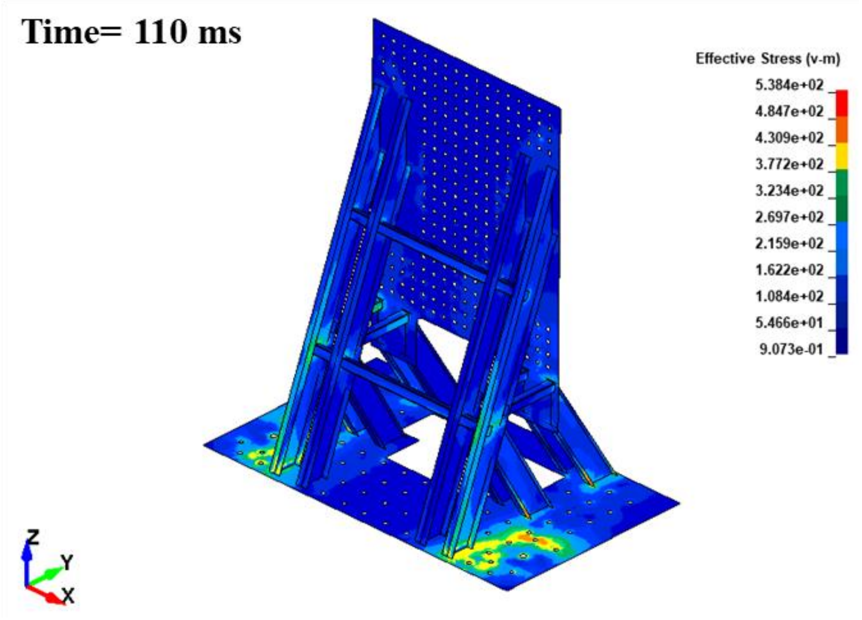

Figure 5.16. Von Mises stress representation of the fixture at 100 and 110 ms

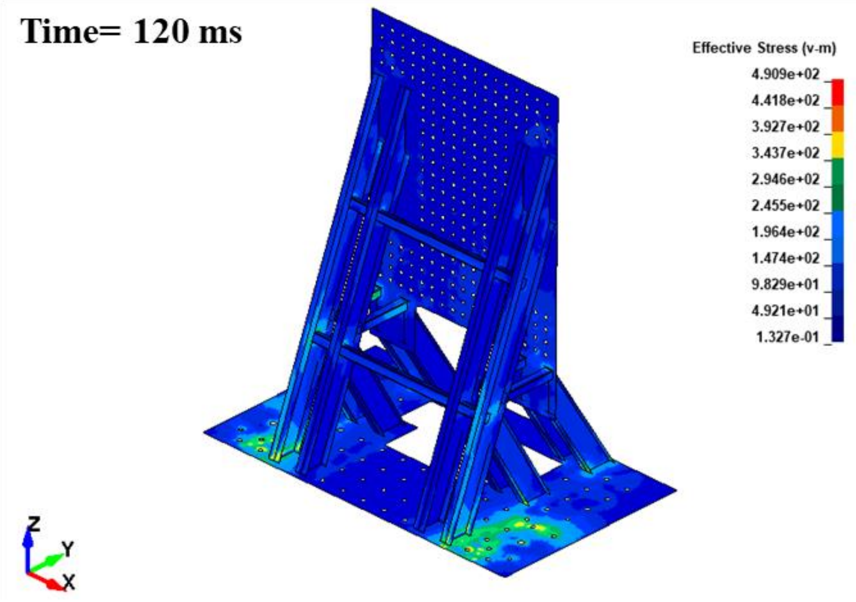

Figure 5.17. Von Mises stress representation of the fixture at 120 ms

According to simulation results, Von-Mises stress distribution shows a rapid increase up to 30 milliseconds. According to the defined acceleration curve in Figure 5.9, after 30 milliseconds acceleration does not increase and sustains at the same level, approximately up to 80 milliseconds. In parallel, after 30 milliseconds, a moderate increase trend of stress distribution is observed, and stress value is reached to the maximum value at 80 milliseconds.

As seen in the results, the maximum stress values are not completely on the vertical test fixture. The maximum values are observed on the few elements on the vertical test fixture. After this time, stress values begin to decrease up to 120 milliseconds. However, stress values do not reach to zero because the real motion is not finalizing, and it continues roughly up to 1225 milliseconds. Due to the deceleration trend of the system, the simulation is not continued for the deceleration period of the system, and it is ended in 120 milliseconds.

The element where the maximum stress appears is shown in Figure 5.18. The variation of stress values in this element where maximum stress appears is given in Figure 5.19.

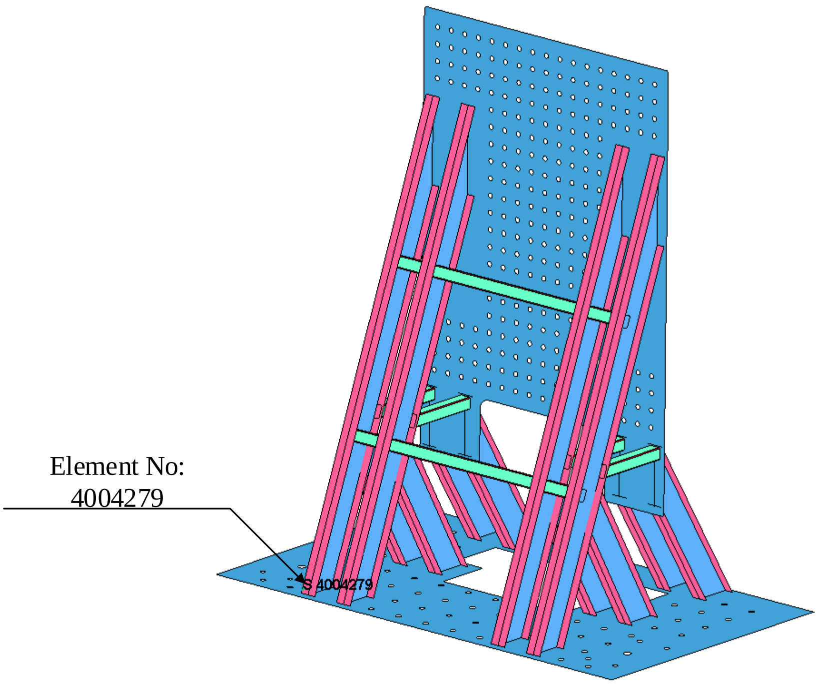

Figure 5.18. The element which maximum stress appears

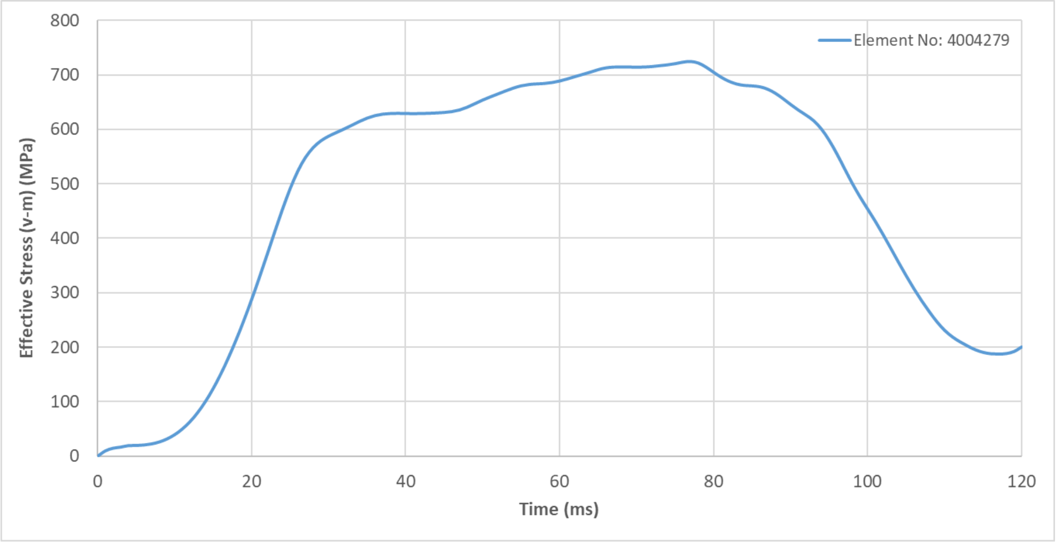

Figure 5.19. Maximum stress values

As seen in Figure 5.20, the maximum effective plastic strain of the vertical test fixture occurs in the outer I-beam section (on the left side), and it can be seen that maximum effective plastic strain is approximately 0.07 mm/mm and below than maximum plastic strain at failure of the material. Thus, the failure is not observed during the simulation in the currently used vertical test fixture.

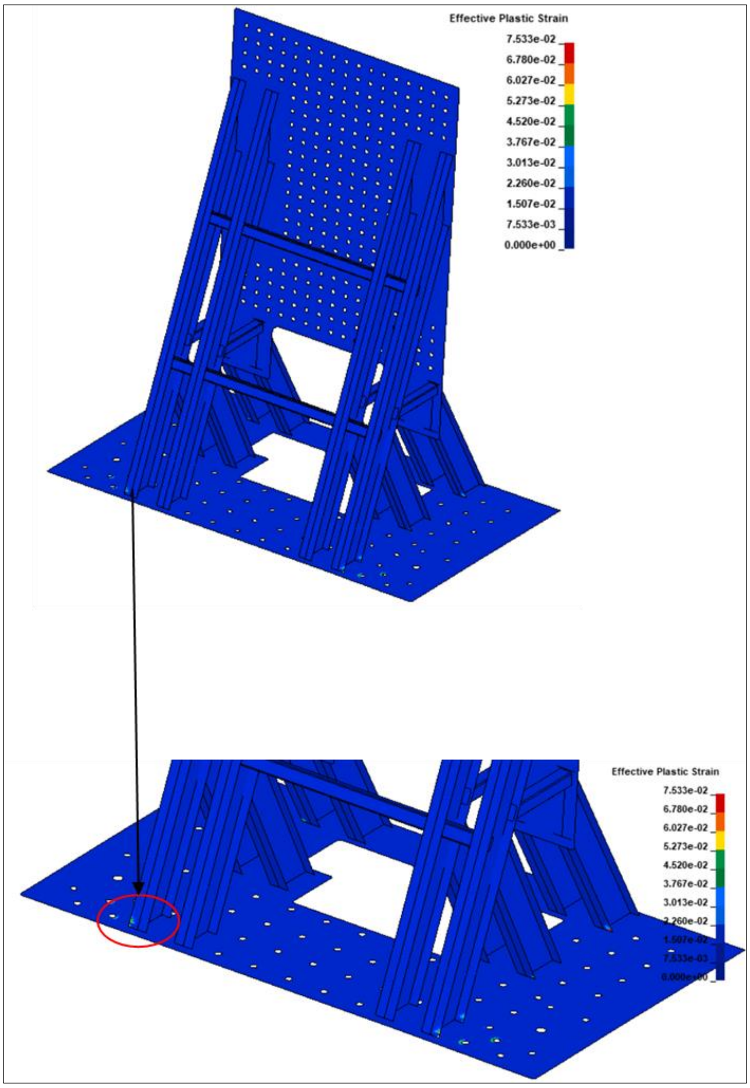

Figure 5.20. Effective plastic strain distribution in the test fixture

In order to examine how the energy changes during the simulation, various types of energy graphs are taken as the outcome of analysis results. First of all, the kinetic energy graph is taken to see how it variates within time. Figure 5.21 demonstrates the history of kinetic energy and time. The velocity of the system increases and then it preserves a steady trend up to absolute time. Kinetic energy time history graph reflects this kind of behavior of the velocity.

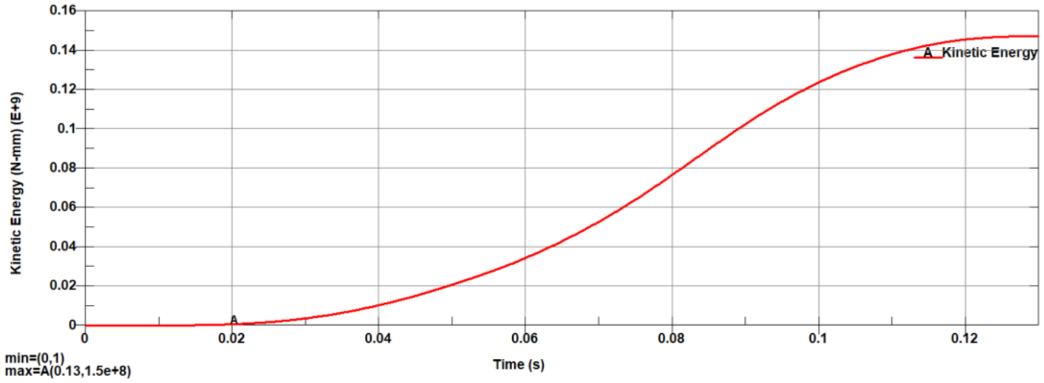

Figure 5.21. Kinetic energy of the system vs. time graph

As a general guideline, the hourglass energy should not exceed 10% of the internal energy during the analysis [37]. The internal energy and hourglass energy versus time domain are shown in Figure 5.22. It can be seen that hourglass energy is approximately 0.89% of the internal energy during the analysis.

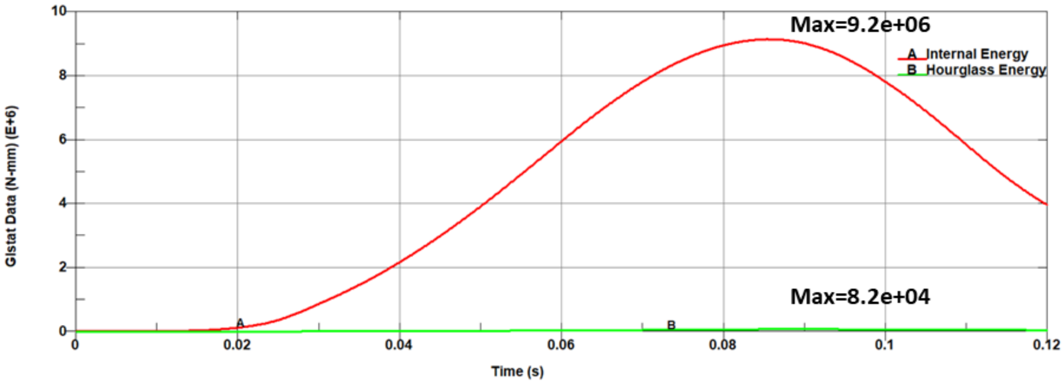

Figure 5.22. Internal energy, hourglass energy vs. time graph

Energy ratio is given in Figure 5.23; it can be seen that energy ratio is one during the analysis.

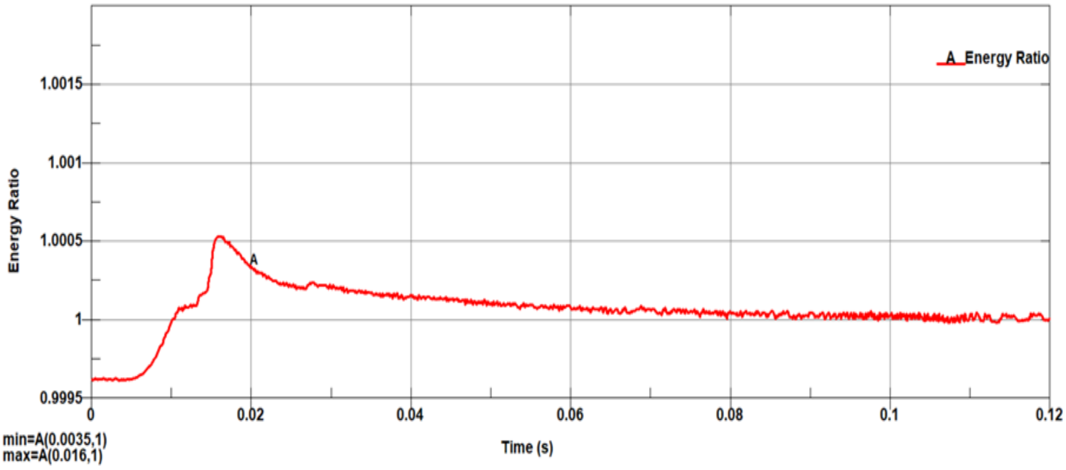

Figure 5.23. Energy ratio vs. time graph

# CHAPTER 6

# PERFORMING DYNAMIC TEST

## 6.1. Introduction

In the fifth chapter, finite element analyses are performed and the results are discussed for the vertical dynamic test configuration. In this chapter, the testing procedure, which is detailed in the third chapter, is conducted. EN 1789+A2 proposes a dynamic test under various configurations. According to the proposed dynamic test, the test assembly is accelerated in order to test the stability and safety performance of the retrofit of the patient compartment. Besides, observation is conducted in order to examine the behavior of the currently used test fixture in the actual test condition, a comparison between actual test observations and FEA results for the currently used test fixture is given in this chapter.

## 6.2. Test Setup

The dynamic test is conducted with the IST Crash Test Simulation System. The test pulse generation process which is summarized in the third chapter is performed in order to obtain the iterated test pulse. Since video records for the dynamic test are one of the significant data, Weinberger Visario G2 and two Speedcam Minivis high-speed cameras are used to record the whole test. The cameras are set to 500 frames/second (fps) for recording the interior compartment during the dynamic test on the other hand off-board camera is set to 1000 frames/second (fps) for the exterior record during the dynamic test. The connected on-board high-speed cameras and light for interior record of the rear patient compartment during the test, are shown in Figure 6.1.

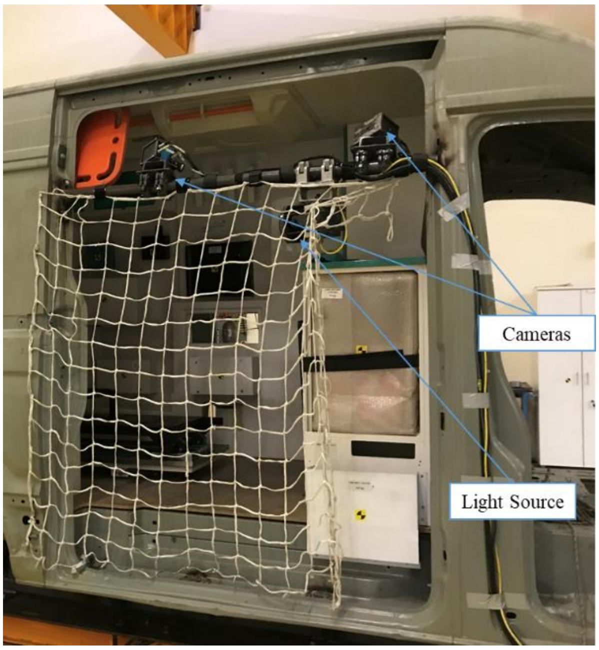

Figure 6.1. High speed imagining cameras and light

According to the developed test procedure in the third chapter, test sample preparation is conducted in two phases as defined below.

1. Interior Preparation of Test Sample:
    - Main Stretcher fixation on the vehicle floor
    - Medical devices fixation
    - Storage compartments (cabinets, drawers) preparation
    - Permanent Seats and their anchorages preparation
    - Other equipment (fire extinguisher, oxygen system, etc.) fixation
2. Exterior Preparation of Test Sample:
    - Test sample preparation to fasten the test fixture to the sled
    - Back door fixation preparation of test sample
    - Camera holding assembly fixation on the test sample

The interior and exterior image of a fully equipped ambulance patient compartment sample are shown in Figure 6.2 and Figure 6.3. The list of medical devices which are fastened to interior surfaces of the patient compartment is given Table 6.1.

Figure 6.2. Interior view of test sample before test

Both fixation points of medical devices on the ambulance vehicle and medical device fixation system are defined according to the test procedure for the devices which are given in Table 6.1. The original fixation points and fixation systems of medical devices are used with actual or approved representative test mass for testing. Maximum design weight permitted to be stored in the storage compartments and drawers is defined and loaded with the sandbags.

Figure 6.3. Exterior view of test sample before the test

Table 6.1. List of medical device in the test

| **Medical Devices** | **Piece** | **Actual or Representative Test Mass** | **Weight** |
|---|---|---|---|
| Main Stretchers | 1 | Representative Test Mass | 54 kg |
| Scoop Stretcher | 2 | Actual Device | 9,5 kg |
| Stretchers Support | 1 | Actual Device | 45 kg |
| Spineboard | 3 | Actual Device | 7 kg |
| Fire Extinguisher | 2 | Actual Device | 3 kg |
| Vacuum Aspirator | 1 | Representative Test Mass | 6.5 kg |
| Defibrillators | 1 | Representative Test Mass | 12 kg |
| Infusion Pump | 1 | Representative Test Mass | 3 kg |
| Ventilator | 1 | Representative Test Mass | 15 kg |
| Oxygen System | 1 | Representative Test Mass | 4 kg |
| Complete Emergency Kit | 1 | Representative Test Mass | 11 kg |
| Basic Medical Materials Cases | 1 | Representative Test Mass | 4.6 kg |
| Heater | 1 | Representative Test Mass | 5.8 kg |
| Right Seat | 1 | Actual Device | 30 kg |
| Front Seat | 1 | Actual Device | 51.5 kg |
| **Note:** According to EN 1789+A2, the dynamic test may be performed with an equivalent mass simulating the actual device with the physical dimensions, weight, and center of gravity in all axes. | | | |

All the connections and structural integrity for the specified equipment are checked before and after the test:

1. Vehicle floor, Main stretcher fixation of the vehicle floor
2. Ambulance equipment mounting and fixation system for medical device
3. Storage compartments, drawers
4. Stretcher support
5. Seats
6. Whole vehicle body

## 6.3. Evaluation of Test Results

After the test conducted, the steps of the inspection are carried in the test sample as a post-test inspection:

- The ambulance floor and test mass mounting hardware are inspected for evidence of material fracture and deformation.
- Equipment mounting devices, systems structure, and hardware are inspected for evidence of material fracture and deformation.
- The final location of the storage compartment’s door, drawer face, or lid is inspected.
- The closed storage compartment is checked after test whether or not the storage compartment can open.
- The inside and outside of the storage compartment are inspected for signs of visible deformation and fractures.
- The storage compartment interior surfaces, latch or locking assemblies, and hardware is inspected for evidence of material fracture and deformation.
- Any instances of deformation or fracture are noted.
- Parts ruptured, partially or fully detached from the equipment mounting device or system and other items is noted.
- The actual test masses or representative test masses is inspected.
- The maximum travel distance is examined for stretcher any item attached to either the holding assembly or stretcher.
- The overall visual examination is conducted inside and outside of the patient compartment to determine occurred sharp edges after the test
- A video record is reviewed for evidence of any item behave such as projectile.

Table 6.2. Test video inspection for ambulance rear compartment

| | |
|---|---|
| Time:0 ms | Time:20 ms |
| 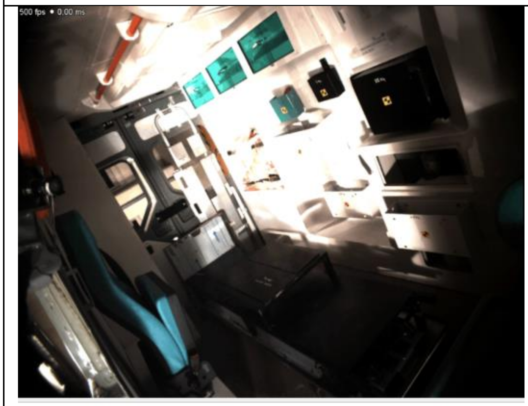 | 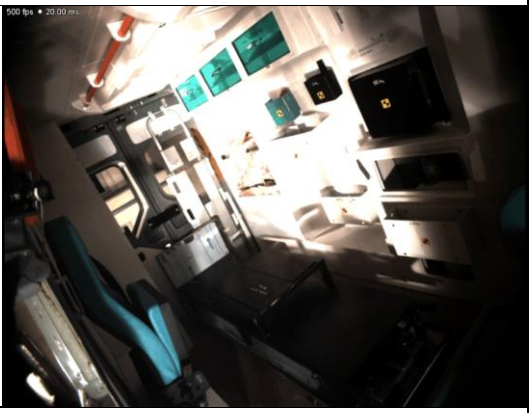 |
| Time: 40 ms | Time: 60 ms |
| 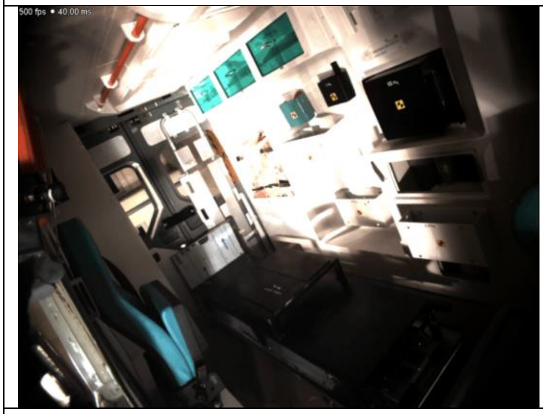 | 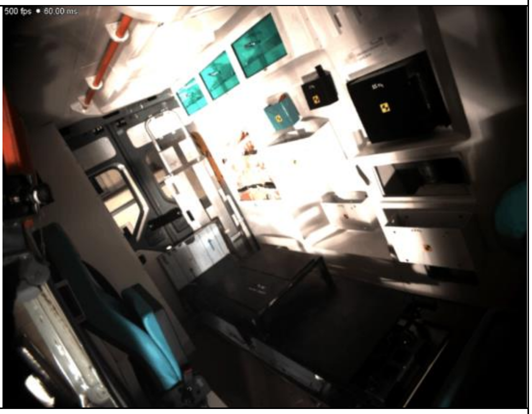 |
| Time: 80 ms | Time: 100 ms |
|  |  |

Table 6.2 (Continued)

| Time:120 ms | Time:140 ms |
|---|---|
| 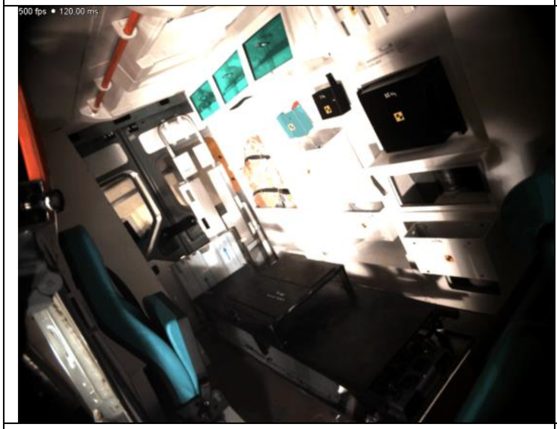 |  |
| Time:160 ms | Time:180 ms |
|  |  |
| Time: 200 ms | Time: 220 ms |
|  | 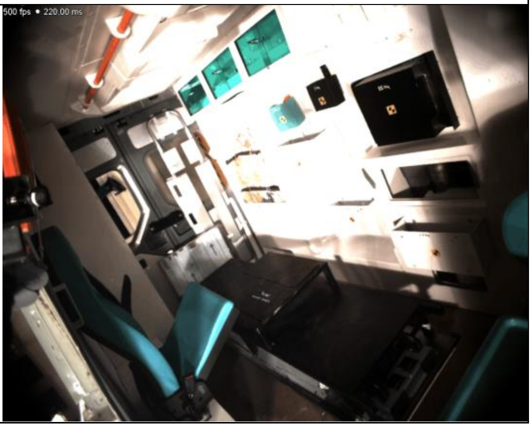 |

According to post-test inspection activities, five findings are recorded. The first one is the bottom side of the storage compartment, which has a sliding door and is located on the left side of the ambulance patient compartment body, as shown in Figure 6.4. The second finding is in the same area with the first one and is detected in the sidewall of storage compartments, which has a sliding door, as shown in Figure 6.5

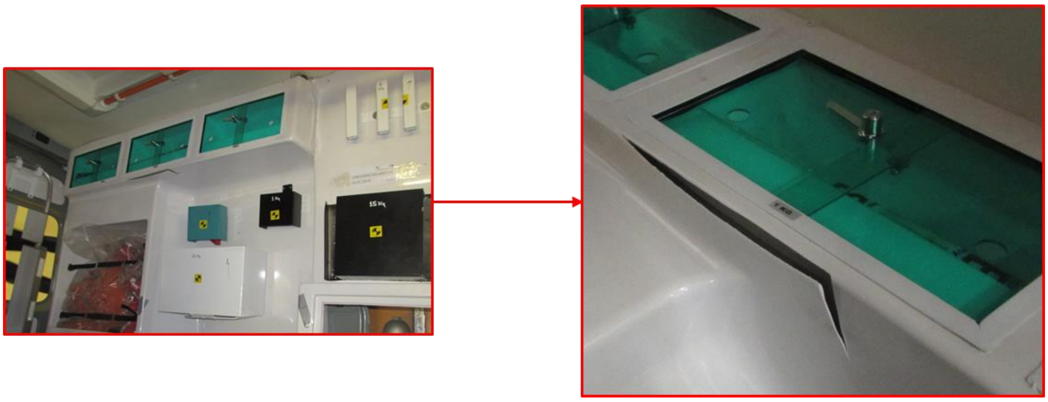

Figure 6.4. First finding by post-test inspection

Figure 6.5. Second finding by post-test inspection

The third one is detected inside the drawer, which is given in Figure 6.6. The fourth finding is detected in the left upper side of the ambulance compartment, as shown in Figure 6.7. In Figure 6.8, the comparison between pre-test and post-test photography is given for stretcher lock pin and locking mechanism. As seen in Figure 6.8, the stretcher lock pin and locking mechanism undergoes deformation, but they sustain load-bearing behavior during the test.

Figure 6.6. Third finding by post-test inspection

Figure 6.7. Fourth finding by post-test inspection

Figure 6.8. Fifth finding by post-test inspection

There are no identified parts and components which are partially or fully detached from their mountings and fixation systems and behave like projectiles during the test. According to the defined test evaluation table criteria in the third chapter, the test is failed due to fracture on the surface, which leads to sharp exposed edges, although observable deformation is negligible.

Apart from interior inspection, external visual inspection is conducted to observe vertical test fixture performance during the dynamic test. It can be inferred that regional deformations occur in the backside of the currently used test fixture. This regional deformation can be seen in Figure 6.9 and Figure 6.10.

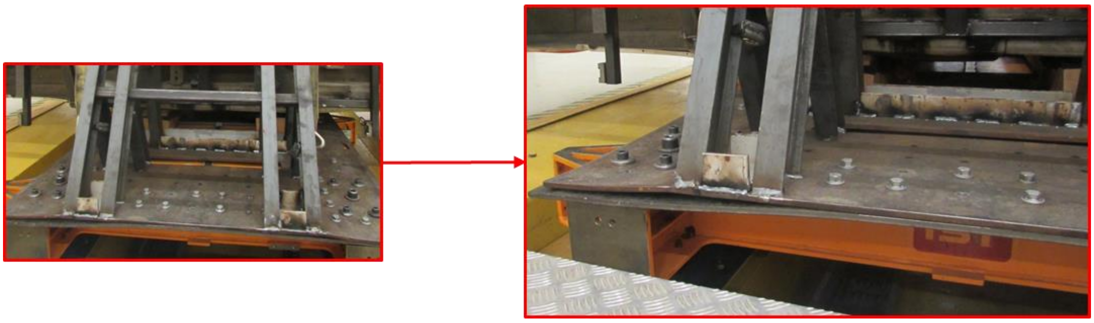

Figure 6.9. Left-side of the test fixture

Figure 6.10. Right-side of the test fixture

## 6.4. Comparison of Simulation Outputs with Actual Test Results

In the scope of this study, basically the vertical acceleration configuration of the test sample is analyzed in order to examine the vertical test fixture performance. Besides, the actual test is conducted in METU-BILTIR Center Vehicle Safety Unit Sled Test Facility according to the test procedure which is given in the third chapter. In this chapter, the details of the vertical (+z) 10 g dynamic test of the ambulance patient compartment is given. The dynamic test is recorded with high-speed cameras. Thus, the results of simulation and camera images obtained from actual test are compared. As seen in Figure 6.11, there is a comparison between test and simulation images in the specified time intervals. Both of them demonstrate that the regions where the outer long I-beams connected to the horizontal plate of the vertical test fixture, are critical in terms of deformation. The regions and shapes of the deformation in the actual test are almost similar with the simulation images. Besides this comparison, in order to compare the acceleration outputs of simulation and actual test data, time history is plotted, and the results are reviewed. Due to high-frequency nature in acceleration signals, low-pass digital filters are using for filtering the acceleration data. As stated before there are two resemble reference standards (SAE J211-1, ISO 6487) [51, 52] for measurement techniques involving the instrumentation used in impact tests carried out on the road vehicles. In both specifications, Channel Frequency Classes (CFC) for impact tests carried out in road vehicles are defined. These channel frequency classes are CFC 60, CFC 180, CFC 600 and CFC 1000 [51, 52]. According to SAE J211-1, CFC 60 is recommended for sled acceleration tests [51]. In this study, the acceleration is measured from the mounted accelerometer to the sled, and the same location of the accelerometer is defined in the simulation for comparison. The node location where the acceleration output is tracked is shown in Figure 6.12. The output data is filtered with a channel frequency class of 60 as compatible with SAE J211 standard both in simulation and the actual test. As seen in Figure 6.13, the acceleration time history of the simulation has a similar trend line with the actual test. Thus it is demonstrating that finite element analysis outputs are compliant with actual test results.

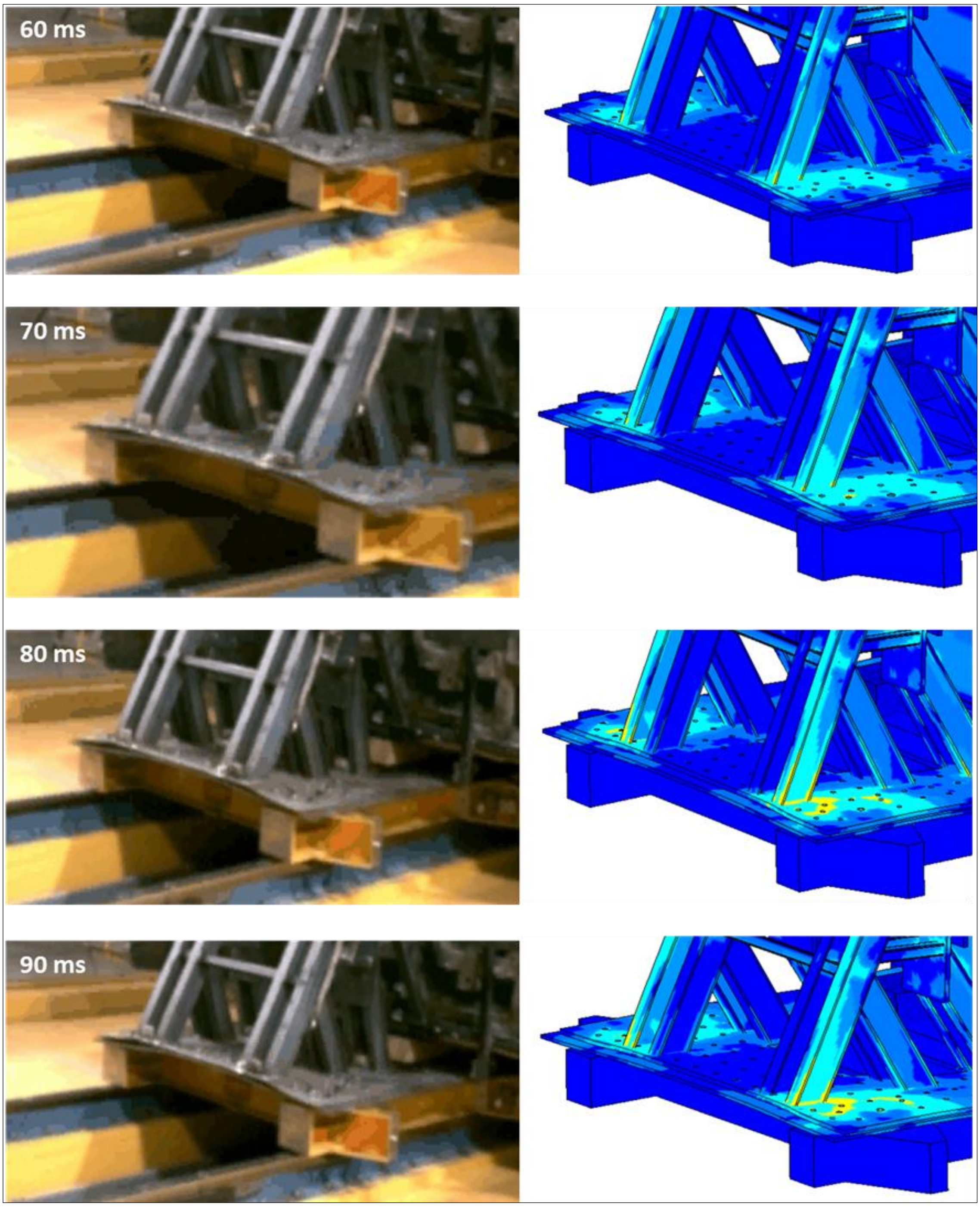

Figure 6.11. Comparison of test and simulation results

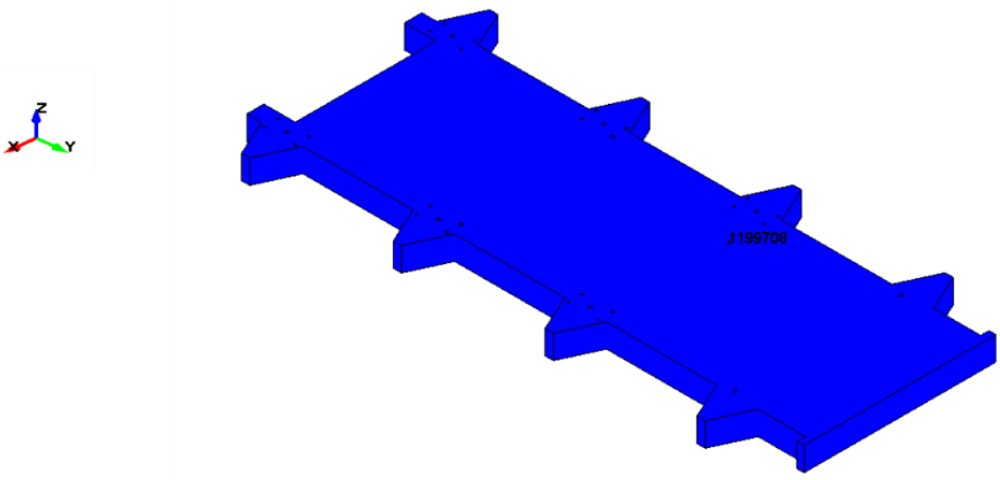

Figure 6.12. Node location for acceleration output

Figure 6.13. Acceleration time history

To conclude, time frames from the vertical impact test demonstrate that the simulation results show similar deformation shapes as in the actual test. Structural local deformation areas and critical regions of the vertical test fixture which are observed in the test, match with the simulation results. Besides, accelerometer outputs are in the same trend both in the test and simulation. According to finite element analyses and test result, it can be inferred that the vertical test fixture can withstand the load experienced under 10 g acceleration; however, the performance of the fixture seems inadequate, and some improvements works should be conducted. These design improvements are presented in the seventh chapter.

# CHAPTER 7

# ALTERNATIVE TEST FIXTURES

## 7.1. Introduction

The objective of this chapter is to propose alternative test fixtures that would have the capability of fastening the fully-equipped patient compartment of the road ambulance (i.e. test sample) to sled in the vertical direction, for conducting 10 g dynamic testing. While developing new alternatives for the vertical test fixture, completely new designs and modification options on the currently used test fixture are studied. Three alternative test fixtures are proposed and FEA results are presented in the following sections. The following steps are implemented for each alternative test fixtures:

- System constraints, material selections, the geometry of the profiles, alignment of the structure are defined.
- Then, the analysis of the developed alternative test fixture is carried out by performing FEA.

The alternative test fixtures have been characterized by its high safety, good operating characteristics, validity according to EN 1789+A2, simplicity in design and manufacturability.

High safety is considered as a first requirement of the test fixture. In order to satisfy this requirement, structural integrity and durability of the components in the case of dynamic loading conditions should be considered. As seen in Figure 6.11, the actual test and the simulation results demonstrate that the regions where the outer long I-beams connected to the horizontal plate of the vertical test fixture, are critical in terms of permanent deformation in the currently used test fixture. The critical areas of the currently used test fixture are taken into consideration to decrease permanent deformations on alternative designs.

Obtaining a reliable operation and good operating characteristic is the second requirement to fulfill. In order to achieve this requirement, the developed test fixture should display an optimal fit by remaining within system limitations. The test fixture shall be modular in terms of the ambulance vehicle model. Easy handling of the test fixture is also essential to support good operating characteristics. This one can be realized with a quick installation of the test sample to the sled and good accessibility.

The validity of the developed test fixture, according to the EN standard is the third requirement to fulfill. The rules for 10 g dynamic testing of road ambulance vehicles are given in the EN standard. Thus the EN standard should not be violated by the method used to secure the test sample to the sled and the developed test fixture itself.

As the final requirement, the developed test fixture should have the feature of simplicity and cost-effectiveness in terms of design and production. In order to achieve that, some targets are established, such as using a small number of parts/components, utilizing standard products and prefering common materials for the test fixture.

### 7.2. Design Constraints

During the developing period of the new alternatives for the test fixture, first of all, constraints are needed to be defined. The needs of METU-BILTIR Center Vehicle Safety Unit Sled Test Facility, the sled design, the tools available in the test facility, the requirements of EN standard, dimensional and mass constraints form a challenging set of design constraints. The details of constraints are given in this section and the summary is presented in Table 7.1.

The sled dimensions are the constraints for the test fixture development. The outer dimensions of the sled are shown in Figure 7.1, which needs to be taking into account while defining dimensions of the test fixture. The sled has outer dimensions of 4100 mm in length 1800 mm in width. The data acquisition systems are located on the front side of the sled. Thus the area which is on the left side of the rectangular slot on the sled could not be considered for specifying total available space for both vertical test fixture and test sample. As a result, the total available length for the vertical test fixture and the test sample can be considered as 3507,5 mm as the maximum in a longitudinal direction.

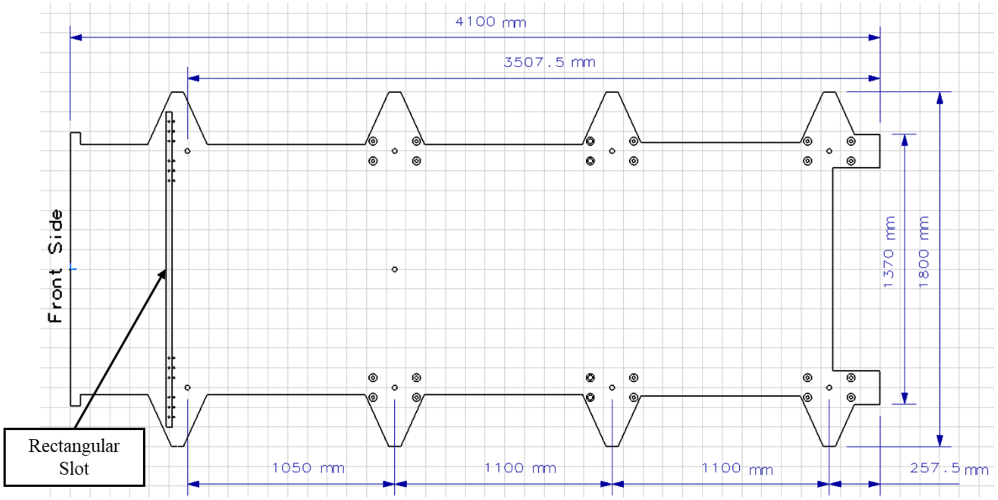

Figure 7.1. The outer dimensions of the sled

There are different types of vehicles such as Ford Transit, Mercedes-Benz Sprinter, Volkswagen Crafter, Volkswagen Transporter, Hyundai H350, Fiat Ducato which are the commonly used brands for the aftermarket ambulance manufacturers. Their patient compartment height and width (upper face of chassis rails to top of roof) are the critical dimensions to designate total available space for the vertical test fixture. The minimum dimensions of the patient compartment are given for Type A1, Type A2, Type B and Type C ambulances in the EN standard. Type C Ambulances require the largest internal dimensions, as shown in Figure 7.2.

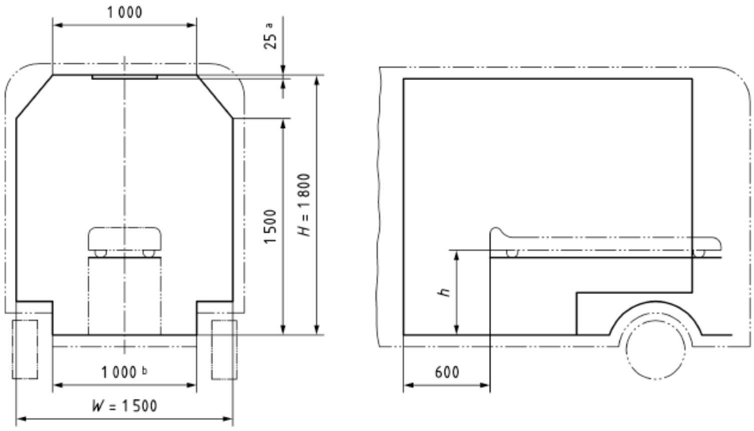

Figure 7.2. Patient’s compartment dimensions for the Type C Ambulances

The height (H) measured from floor to roof and the width (W) measured from the right side to the left side are the essential parameters in order to define the outer dimension of the test fixture. While determining these dimensions, there should be no unwanted contact between the data acquisition system and the test sample. There should be at least 100 mm gap in the longitudinal direction for avoiding any contact between the data acquisition system and the closest point of the test sample.

The above given dimensional constraints will form the base of the preliminary design of the vertical test fixture.

The other constraint is about the maximum payload of the sled which is 2500 kg. It is undesirable to exceed this maximum value, so the maximum mass of the fully equipped patient compartment (with connecting structure and connecting plate) needs to be defined. It seems that a fully equipped test sample mass fluctuates between 1500-1700 kg according to test records of the METU-BILTIR Center Vehicle Safety Unit Sled Test Facility. Thus, the total mass of the developed test fixture and the main plate should not exceed 800 kg.

The EN standard requirements which are about securing the patient compartment of the vehicle during the test can be considered as the other constraint for developing a new vertical test fixture. In the EN standard Clause 5.4.1 specifies that;

a) The method used to secure the vehicle during the test shall not strengthen the body or the arrangement of the patient's compartment or to lessen the normal deformation of the structure.
b) The only reinforcements allowed are a subframe under the original van shell or chassis longitudinal box sections or chassis rails to fix the body/shell to the test facility.
c) A supporting point (not a fixation) for the z-axis can be used as shown in Figure 7.3.

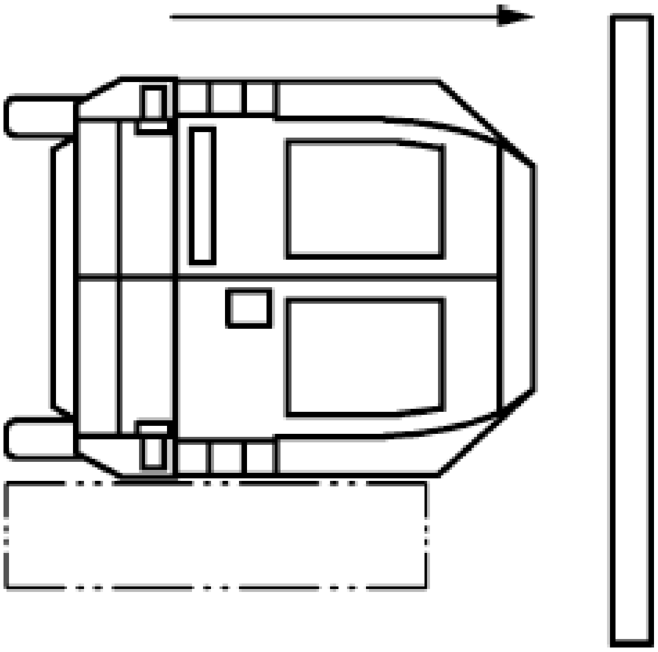

Figure 7.3. Supporting point [13]

By taking Clause 5.4.1 of the EN standard into account, chassis rails should be used in order to fasten the body shell to the sled via vertical test fixture. As shown in Figure 7.3, fixation is not allowed, thus supporting structure should be placed for the side panel of the ambulance patient compartment body. However, side panels of such vehicles are generally not flat; as a result, irregular sloped surfaces need to be considered for the support structure.

Table 7.1. Constraint summary for developing the new test fixture

- Sled design
- Number and locations of screw holes on the sled
- Test sample mass and dimensions
- Maximum payload of the sled test platform
- EN 1789+A2 requirements about securing of the ambulance patient compartment

The currently used fixture design is also reviewed in this section in order to understand the needs for development. As discussed in the fifth chapter, the maximum effective plastic strain is approximately 0.07 mm/mm for the currently used test fixture (Figure 5.20). As seen in Figure 6.11, the actual test and the simulation results demonstrate that this permanent deformation in the currently used test fixture is observable and high. Although the failure is not observed during the test and simulations, the permanent deformation should be reduced as much as possible. The whole assembly for the dynamic test in the vertical direction is given in Figure 7.4.

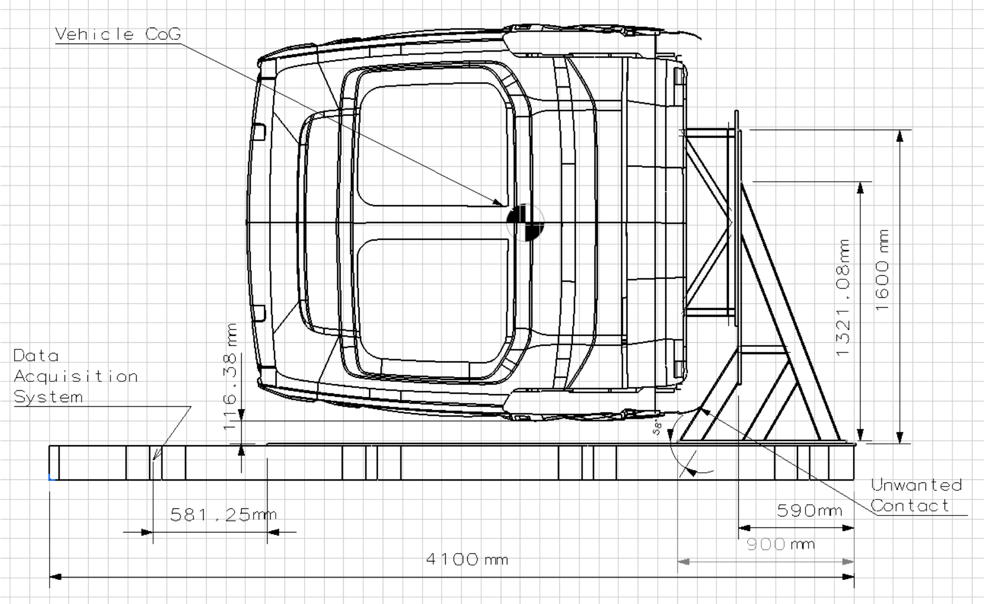

Figure 7.4. The currently used test fixture assembly

## 7.3. Alternative Test Fixtures

The alternative designs for developing a new test fixture are studied in this section in order to make improvements and satisfy the defined objectives. The constraints and the studies about the currently used fixture are taken into consideration in the developing process. In order to determine the best alternatives, pre-studies are conducted and alternative test fixtures are presented.

### 7.3.1. First Alternative Test Fixture

The first alternative test fixture is modeled by the composition of vertical plate, square profiles and I-beams, as shown in Figure 7.5. The technical drawing of this alternative test fixture is given in Appendix B. According to the objectives, the developed fixture should have the feature of simplicity and cost-effectiveness in terms of design and production. In order to achieve that, catalog products and easily available material such as S355 structural steel are chosen for the model.

The same finite element model creation process, which is detailed in Section 5.4, is implemented for this new alternative test fixture. The material properties, load and boundary conditions, termination time for analysis are defined according to Section 5.4.1, Section 5.4.2, Section 5.4.3, respectively.

Von-Mises stresses are determined for the first alternative test fixture and the maximum values are given in Figure 7.6 for the period from 0 to 120 milliseconds. According to simulation results, Von-Mises stress distribution shows a rapid increase up to 30 milliseconds for the models. After 30 milliseconds, a moderate increase trend of stress distribution is observed, and stress values are reached to the maximum value at 70 milliseconds (Figure 7.6). The maximum values are observed on the few elements on the newly developed fixture. After 80 milliseconds, stress values begin to decrease up to 120 milliseconds. However, stress values do not reach to zero because the real motion is not finalizing. Due to the deceleration trend of the system, the simulation is not continued for the deceleration period of the system, and it is ended in 120 milliseconds. The simulation results show that the maximum stress values in the first alternative test fixture are lower than the currently used test fixture.

As seen in Figure 7.7, the maximum effective plastic strain is approximately 0.02 mm/mm for the first alternative test fixture, which is lower than the currently used test fixture.

According to FEA results, the failure is not observed during the simulations in the first alternative fixture and this developed fixture design has better performance in terms of structural integrity and durability than currently used vertical test fixture.

Although the performance of the fixture is improved, its mass becomes much more than the currently used test fixture. As stated in previous sections, there is a restriction about the total mass of the test sample and fixture because of the maximum payload of the sled. Thus, the total mass of the newly developed fixture and the main plate should not exceed 800 kg. The first alternative test fixture and the main plate have a total mass of 789 kg. Although this mass value is in the limit, when it is compared with the total mass of the currently used fixture and the main plate (652 kg), it is very high.

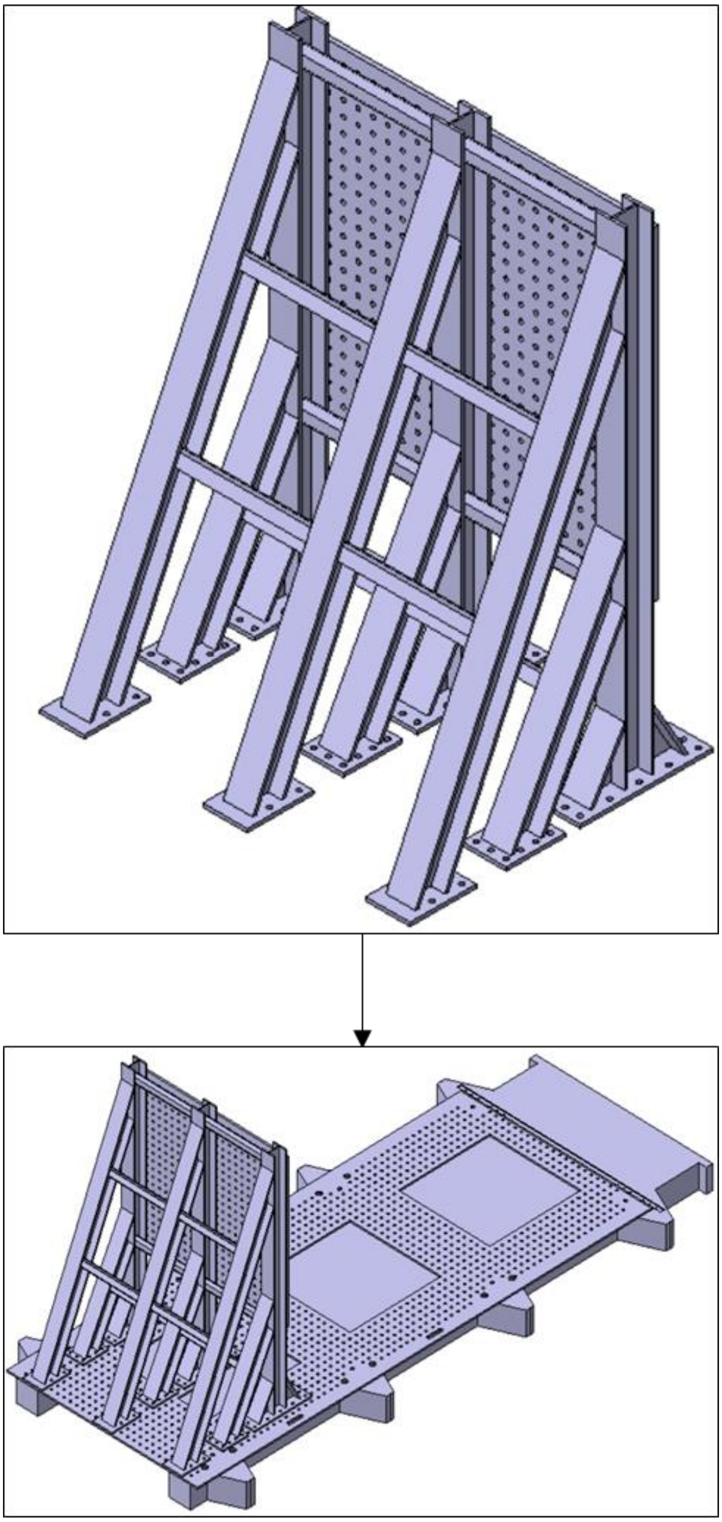

Figure 7.5. First alternative test fixture and its assembled configuration

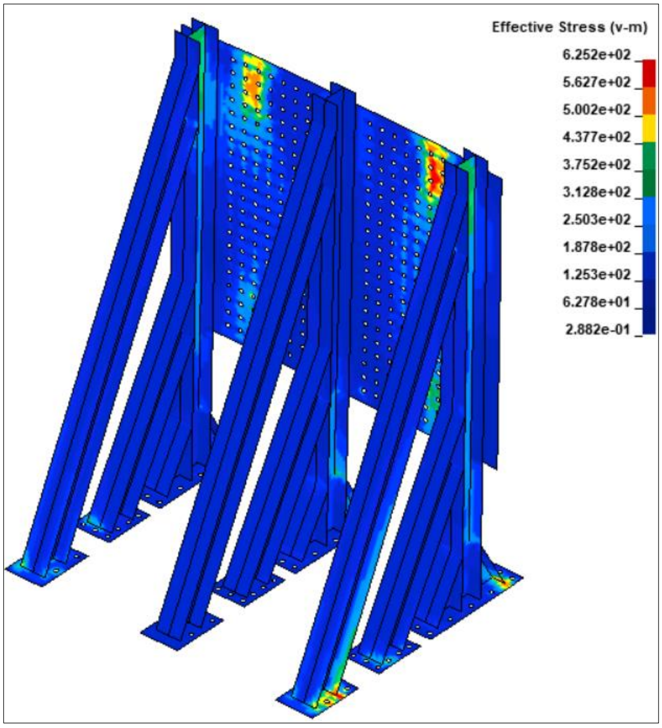

Figure 7.6. The maximum von Mises stress results for the first alternative

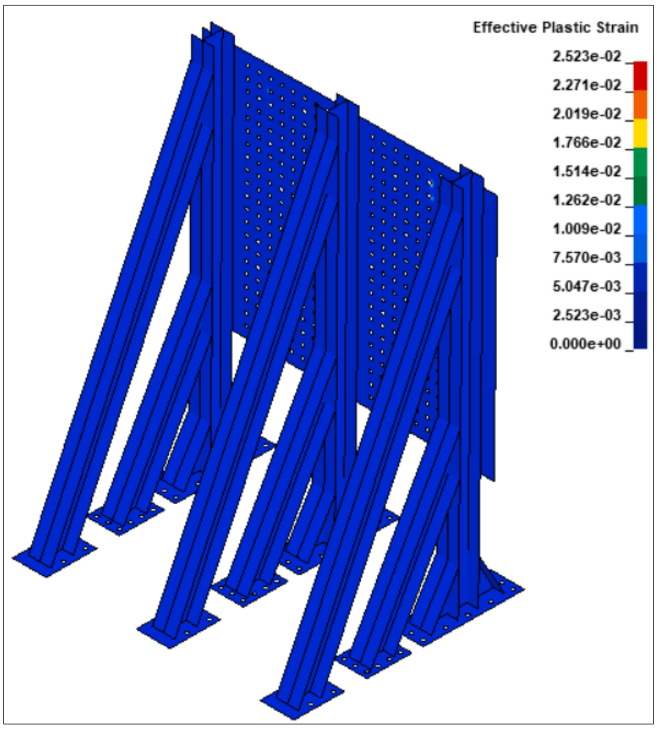

Figure 7.7. The maximum effective plastic strain in the first alternative

### 7.3.2. Second Alternative Test Fixture

The second alternative test fixture is mostly generated by using the plate-like structures as shown in Figure 7.8. Two vertical supports and one sloped plate are chosen after preliminary works are conducted. The technical drawing of this alternative test fixture is given in Appendix B. According to the objectives, the developed fixture should have the feature of simplicity and cost-effectiveness in terms of design and production. In order to achieve that, catalog products and easily available material such as S355 structural steel are chosen for the model.

The same finite element model creation process, which is detailed in Section 5.4, is implemented for this new alternative test fixture. The material properties, load and boundary conditions, termination time for analysis are defined according to Section 5.4.1, Section 5.4.2, Section 5.4.3, respectively.

Von-Mises stresses are determined for the second alternative test fixture and the maximum values are given in Figure 7.9 for the period from 0 to 120 milliseconds. According to simulation results, Von-Mises stress distribution shows a rapid increase up to 30 milliseconds for the models. After 30 milliseconds, a moderate increase trend of stress distribution is observed, and stress values are reached to the maximum value at 70 milliseconds (Figure 7.9). The maximum values are observed on the few elements on the newly developed fixture. After 80 milliseconds, stress values begin to decrease up to 120 milliseconds. However, stress values do not reach to zero because the real motion is not finalizing. Due to the deceleration trend of the system, the simulation is not continued for the deceleration period of the system, and it is ended in 120 milliseconds. The simulation results show that the maximum stress values in the second alternative test fixture are lower than the currently used test fixture.

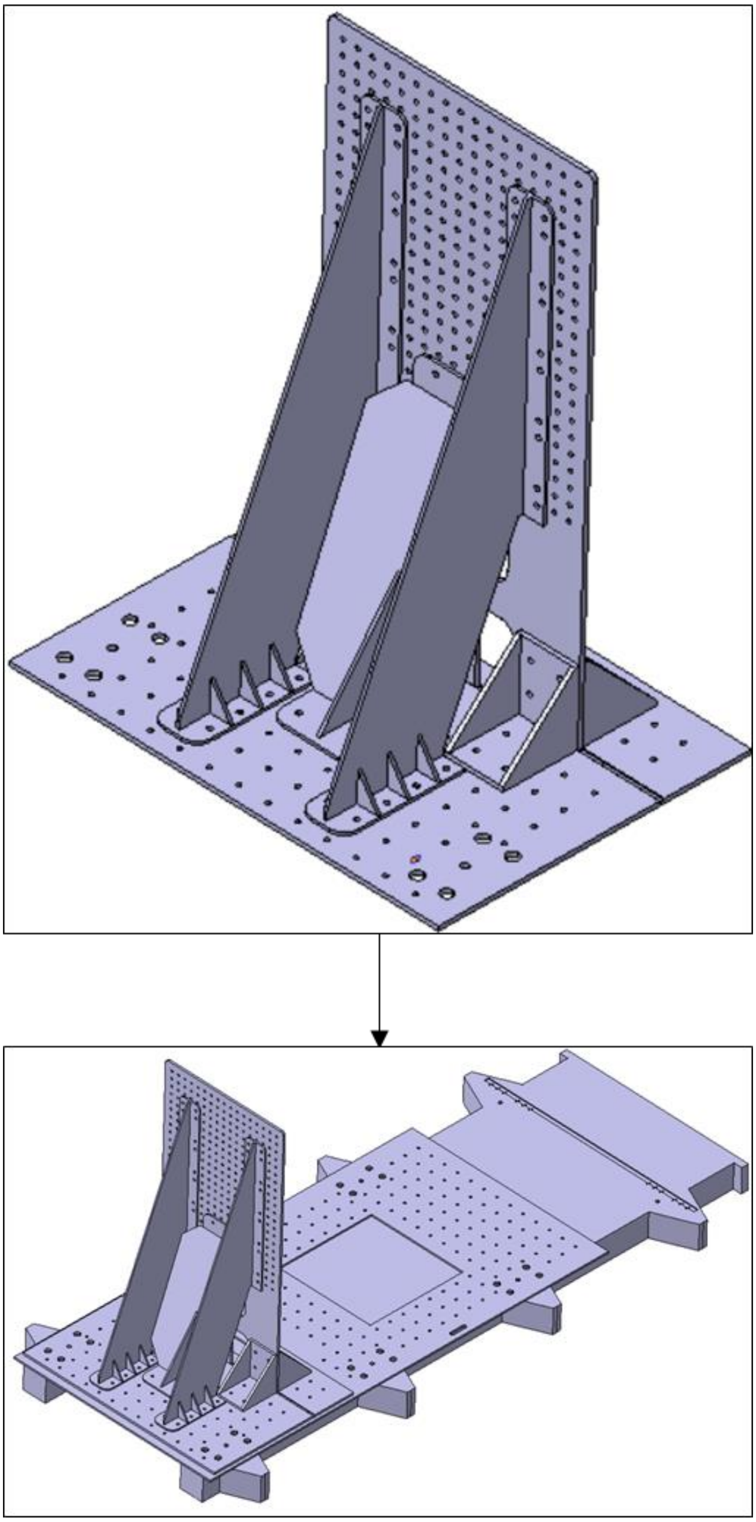

Figure 7.8. Second alternative test fixture and its assembled configuration

As seen in Figure 7.10, the maximum effective plastic strain is approximately 0.01 mm/mm for the second alternative test fixture, which is lower than the currently used test fixture. When the load-bearing parts of the second alternative are only checked, it can be seen that the maximum effective plastic strain has become very low, as shown in Figure 7.11.

According to FEA results, the failure is not observed during the simulations in the second alternative test fixture and this developed fixture design has better performance in terms of structural integrity and durability than currently used vertical test fixture.

Although the performance of the fixture is improved, its mass becomes much more than the currently used test fixture. As stated in previous sections, there is a restriction about the total mass of the test sample and fixture because of the maximum payload of the sled. Thus, the total mass of the newly developed fixture and the main plate should not exceed 800 kg. The second alternative test fixture and the main plate have a total mass of 786 kg. Although this mass value is in the limit, when it is compared with the total mass of the currently used fixture and the main plate (652 kg), it is very high.

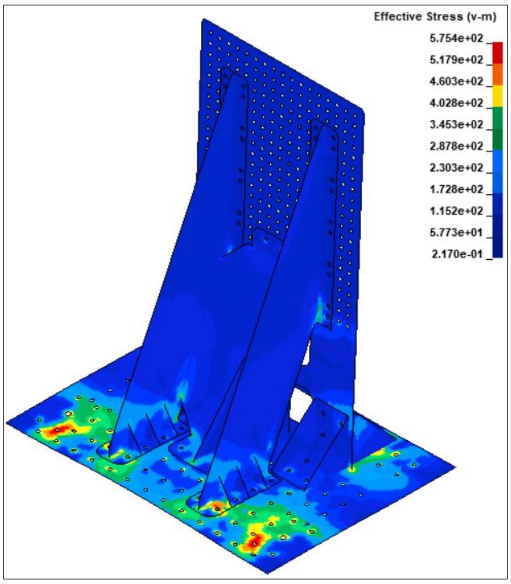

Figure 7.9. The maximum von Mises stress results for the second alternative

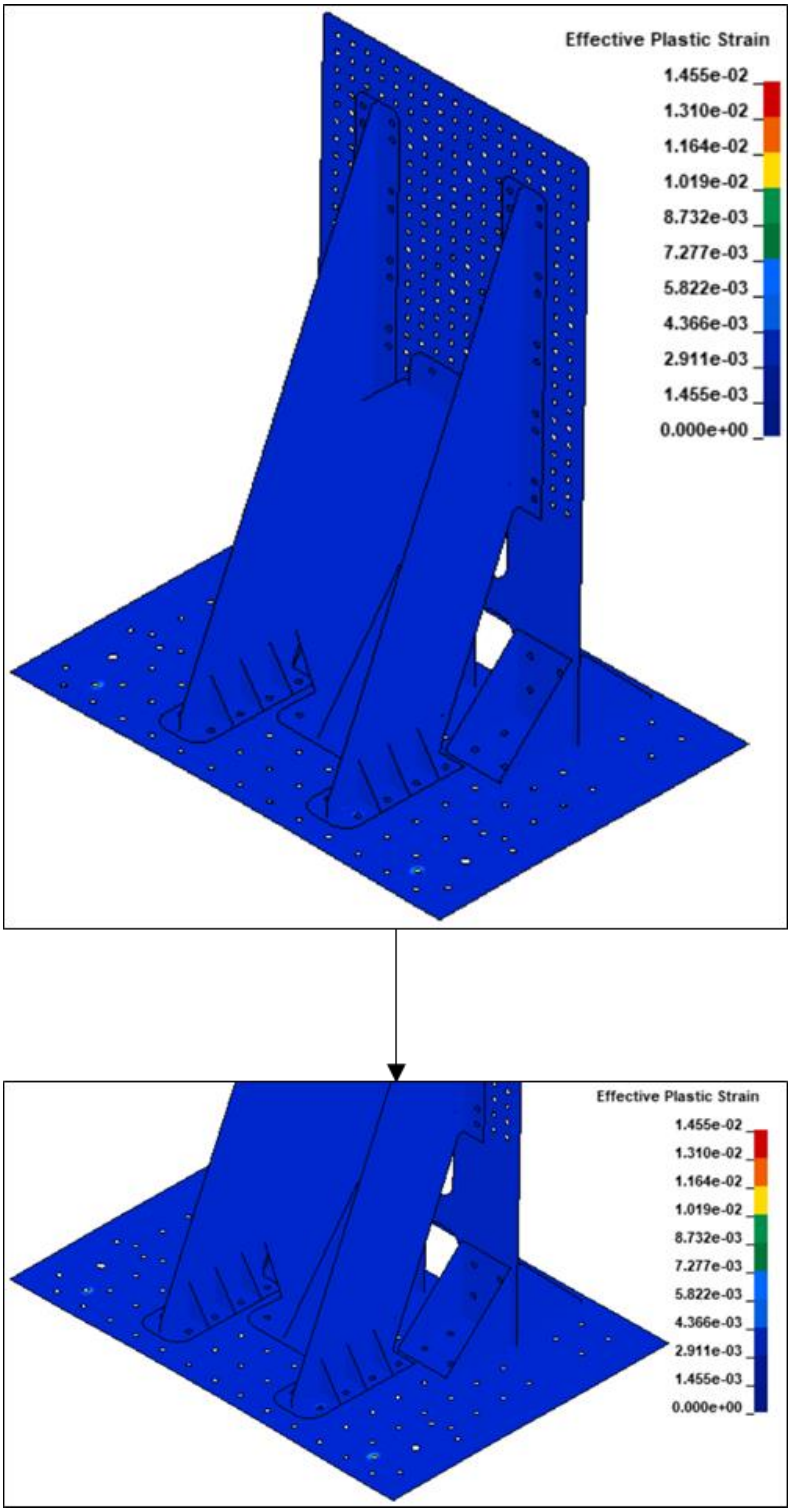

Figure 7.10. The maximum effective plastic strain in the second alternative

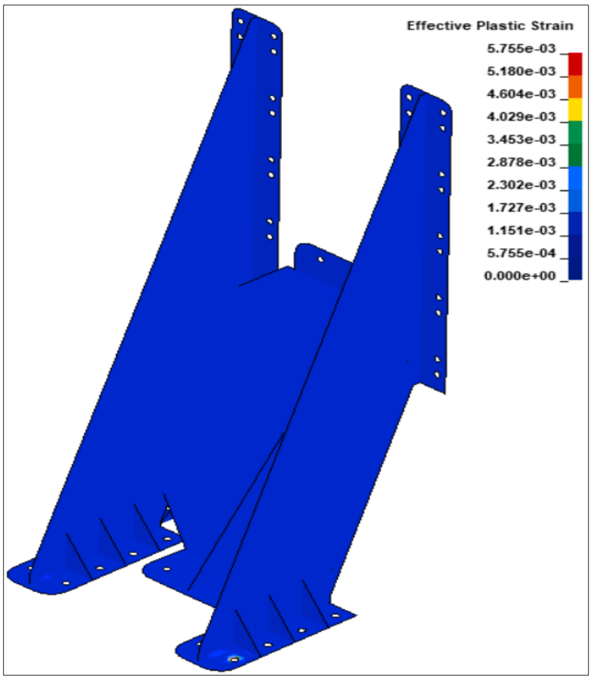

Figure 7.11. The maximum effective plastic strain in the load-bearing parts of the second alternative

### 7.3.3. Third Alternative Test Fixture

Although the mass values of the first and second alternative test fixtures are in the limit, they are very high when we consider the mass of the currently used fixture. This increase in mass also leads to additional costs for ambulance manufacturers and it makes the investment of new fixture design unfeasible. For that reason, modification options on the currently used test fixture are studied. After conducting some studies, the modified design is proposed as a third alternative test fixture and given in Figure 7.12.

According to the FEA results which are discussed in the fifth chapter, the permanent deformation occurs in the backside of the currently used test fixture. For that reason, some modifications are applied to the main plate, the horizontal plate and the backside of the currently used test fixture for increasing the strength. Other properties of the third one, such as I-beam dimensions and thicknesses are all the same with the currently used test fixture.

Figure 7.12. Third alternative test fixture and its assembled configuration

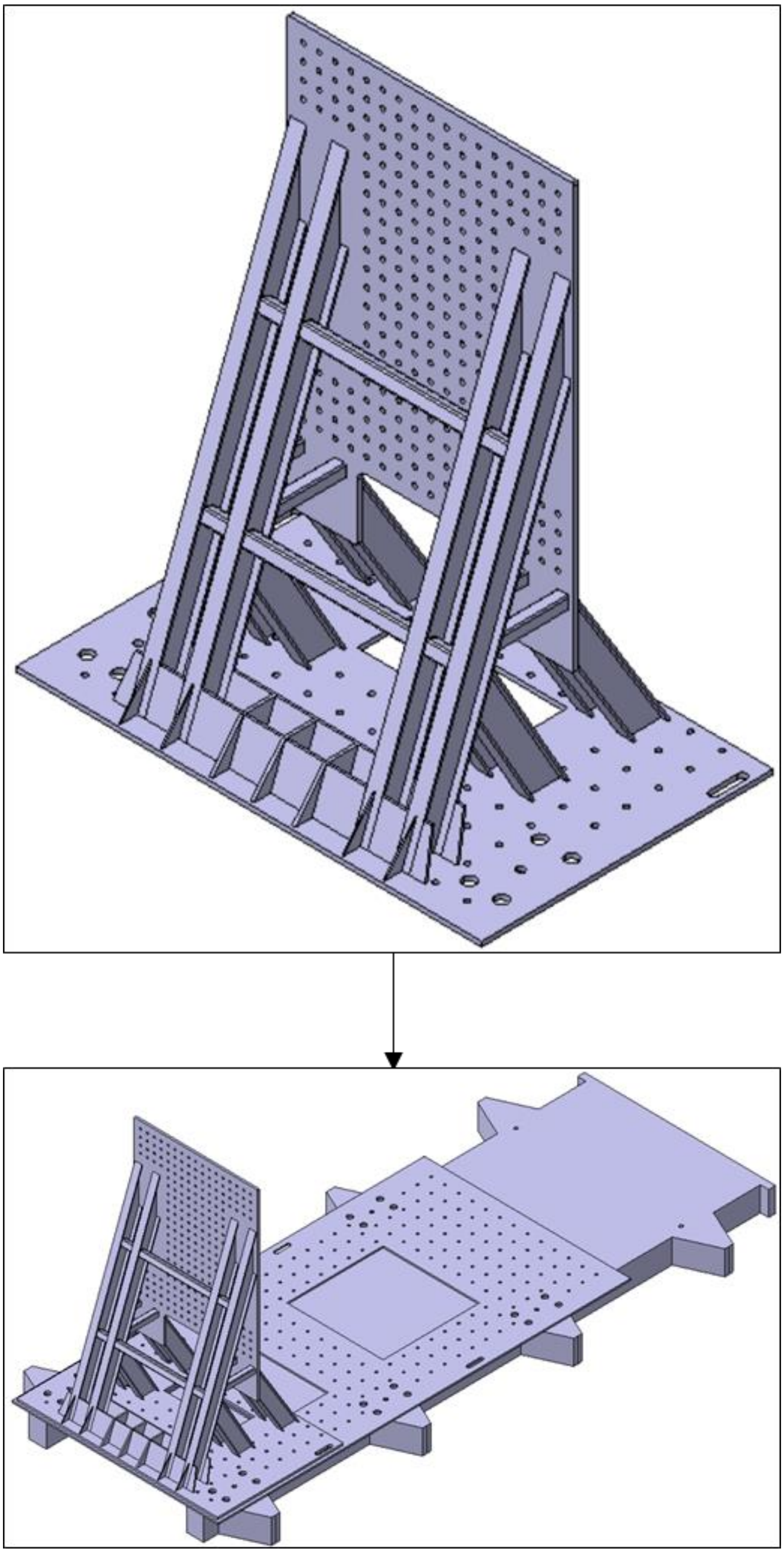

Figure 7.12. Third alternative test fixture and its assembled configuration

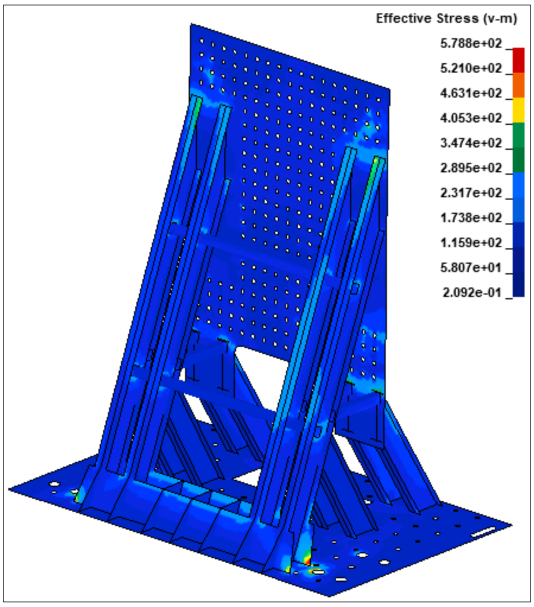

Figure 7.13. The maximum von Mises stress results for the third alternative

The same finite element model creation process, which is detailed in Section 5.4, is implemented for this alternative test fixture. The material properties, load and boundary conditions, termination time for analysis are defined according to Section 5.4.1, Section 5.4.2, Section 5.4.3, respectively.

Von-Mises stresses are determined for the third alternative test fixture and the maximum values are given in Figure 7.13 for the period from 0 to 120 milliseconds. According to simulation results, Von-Mises stress distribution shows a rapid increase up to 30 milliseconds for the models. After 30 milliseconds, a moderate increase trend of stress distribution is observed, and stress values are reached to the maximum value at 40 milliseconds (Figure 7.13). The maximum values are observed on the few elements on the newly developed fixture. After 80 milliseconds, stress values begin to decrease up to 120 milliseconds. However, stress values do not reach to zero because the real motion is not finalizing. Due to the deceleration trend of the system, the simulation is not continued for the deceleration period of the system, and it is ended in 120 milliseconds.

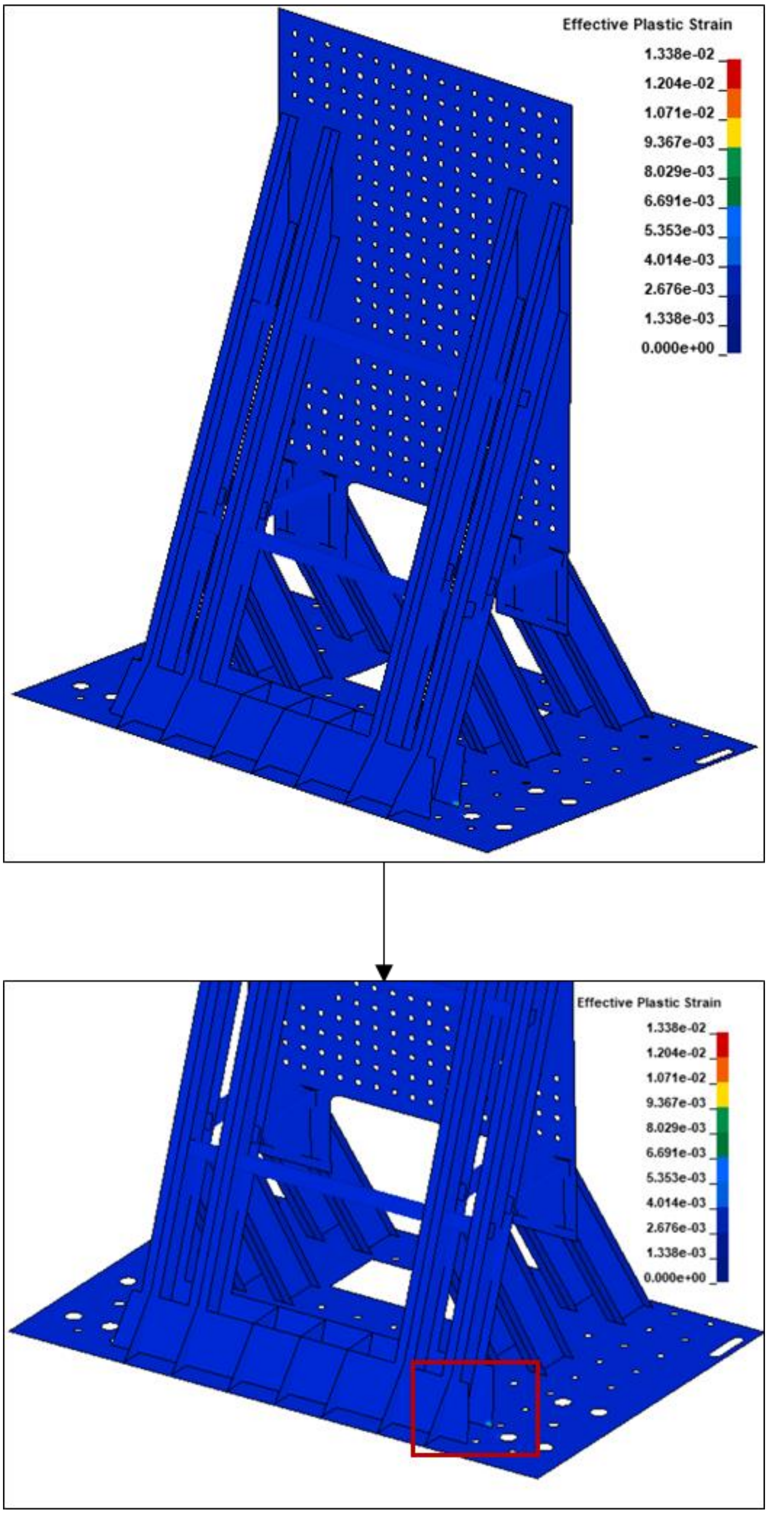

Figure 7.14. The maximum effective plastic strain in the third alternative

The simulation results show that the maximum stress values in the third alternative test fixture are lower than the currently used test fixture. As seen in Figure 7.14, the maximum effective plastic strain of the fixture occurs in the outer section of the stiffener. It can be seen that the maximum effective plastic strain is approximately 0.01 mm/mm for the third alternative test fixture, which is lower than the currently used test fixture.

According to FEA results, the failure is not observed during the simulations in the third alternative test fixture and this developed fixture design has better performance in terms of structural integrity and durability than currently used vertical test fixture.

The performance of the third alternative test fixture is improved and its mass becomes little more than the currently used test fixture. As stated in previous sections, there is a restriction about the total mass of the test sample and fixture because of the maximum payload of the sled. Thus, the total mass of the newly developed fixture and the main plate should not exceed 800 kg. The third alternative test fixture and the main plate have a total mass of 706 kg. This mass value is in the limit and when it is compared with the total mass of the currently used fixture and the main plate (652 kg), it is acceptable.

### 7.3.4. Comparison of the Alternative Test Fixtures

In this section, the comparison of modeling and analysis results for the currently used fixture and newly developed alternative test fixtures are presented. Although the mass and the dimension of three developed alternatives are within limits, the third alternative test fixture provides advantages over the other alternative test fixtures.

As seen in Table 7.2, the outer dimensions of the third alternative test fixture are the same as the currently used test fixture. The height of the second alternative is higher than the others. On the other hand, the first alternative is wider than the first and third alternative test fixtures.

As discussed in previous sections, there is a restriction about the total mass of the test sample and fixture because of the maximum payload of the sled. As seen in Table 7.3, although all the mass values are in the limit, it seems that the first and second alternative test fixtures are very heavy. These fixtures result in about 21 % increase in mass when it is compared with the currently used test fixture. This increase in mass also leads to additional costs for the ambulance manufacturers and it makes the investment of new fixture design unfeasible.

On the other hand, the mass of the third alternative test fixture is lower than the others. It only results in about 8.2 % increase in mass when it is compared with the currently used test fixture.

As stated before, the maximum effective plastic strain is approximately 0.07 mm/mm for the currently used test fixture. As seen in Figure 6.11, the actual test and the simulation results demonstrate that this permanent deformation in the currently used test fixture is observable and high. Although the failure is not observed during the test and simulations, the permanent deformation should be reduced as much as possible.

As seen in Table 7.4,  the developed alternative test fixtures have better performance than currently used vertical test fixture. Especially, the second and third alternatives show significant improvement when the effective plastic strain values are compared.

As a result, the newly designed fixtures are better than the currently used test fixture in terms of structural integrity and durability, as shown in Table 7.4. However, all these comparison data which are summarized in the tables (Table 7.2, Table 7.3, Table 7.4) prove that the third alternative test fixture performs best.

Table 7.2. Dimensional comparison of the alternative test fixtures

| Name of Fixture | Properties | Measurement |
|---|---|---|
| Currently Used Test Fixture | Height (H) | 1600 mm |
| | Width (W) | 900 mm |
| | Length (L) | 590 mm |
| First Alternative Test Fixture | Height (H) | 1662 mm |
| | Width (W) | 1200 mm |
| | Length (L) | 855 mm |
| Second Alternative Test Fixture | Height (H) | 1715 mm |
| | Width (W) | 900 mm |
| | Length (L) | 797 mm |
| Third Alternative Test Fixture | Height (H) | 1600 mm |
| | Width (W) | 900 mm |
| | Length (L) | 590 mm |

Table 7.3. Comparison of mass

| Name of Fixture | Material | Total Mass |
|---|---|---|
| Currently Used Test Fixture | S355 | 652 kg |
| First Alternative Test Fixture | S355 | 789 kg |
| Second Alternative Test Fixture | S355 | 786 kg |
| Third Alternative Test Fixture | S355 | 706 kg |

Table 7.4. Comparison of the FEA results

| **Name of Fixture** | **Maximum von Mises stress (MPa)** | **Maximum effective plastic strain (mm/mm)** |
|---|---|---|
| Currently Used Test Fixture | 715 | 0.07 |
| First Alternative Test Fixture | 625 | 0.02 |
| Second Alternative Test Fixture | 575 | 0.01 |
| Third Alternative Test Fixture | 578 | 0.01 |

# CHAPTER 8

# PROPOSED FIXING METHOD

## 8.1. Introduction

The fastening method is significant to ease fixing the fully-equipped patient compartment to the sled. Proper fixture planning can considerably reduce the time for the preparation of the test sample.

Since there is no mechanism in the currently used vertical test fixture, it is very time-consuming to bring two vertical plates face-to-face and fasten these two plates from appropriate holes with bolt connections. For that reason, fastening solutions are discussed and the necessary preparation of the fixture side and the patient compartment side are presented in this chapter.

## 8.2. Fixing Method and Preparations

### 8.2.1. Preparations on the Fixture

At the bottom of the vertical plate of the fixture, there are three 30 mm diameter holes for three pins. The center pin is used as a stopper for the safety plate, while right and left ones are used for aligning the connecting plate. The right and left pins are longer than the center pin, as shown in Figure 8.1. In order to fix the center pin from the backside of the vertical plate, M12 x 55 mm bolt (DIN 6921) and washer (DIN 6340-13) is used, and two M12 x 110 mm bolts and washers are used for aligning pins. It should be checked that all three pins are entirely inside the holes on the vertical plate.

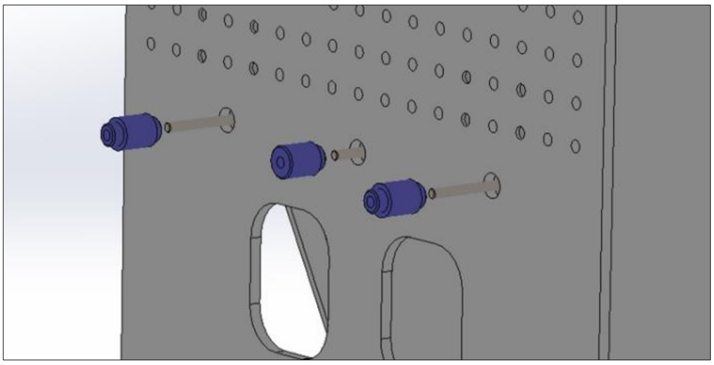

Figure 8.1. Locating of pins

The safety plate is located to the vertical plate of the fixture, as shown in Figure 8.2. The primary duty of the center pin is to restrict the horizontal motion of the safety plate. 28 mm diameter holes in the safety plate are for the left and right pins and they go through from these holes.

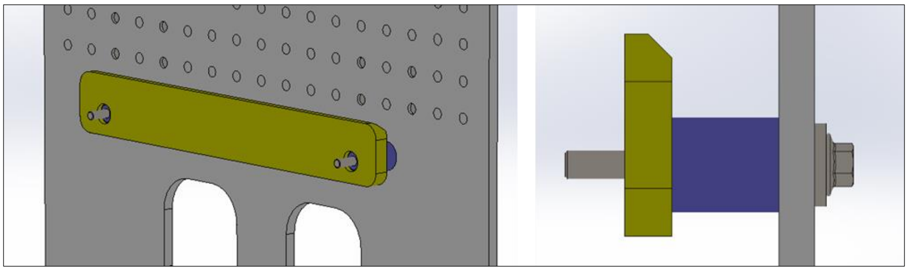

Figure 8.2. Safety plate

In order to fix the safety plate, two washers and two hexagon flange nuts (DIN 6923-M12) are used on the left and right, as shown in Figure 8.3. The sectional view of the safety plate connection is presented for details in Figure 8.4.

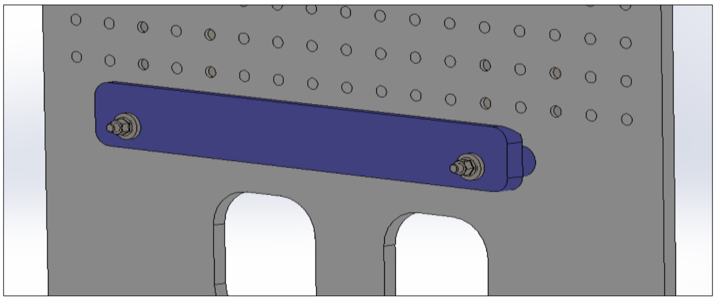

Figure 8.3. Fixation of safety plate

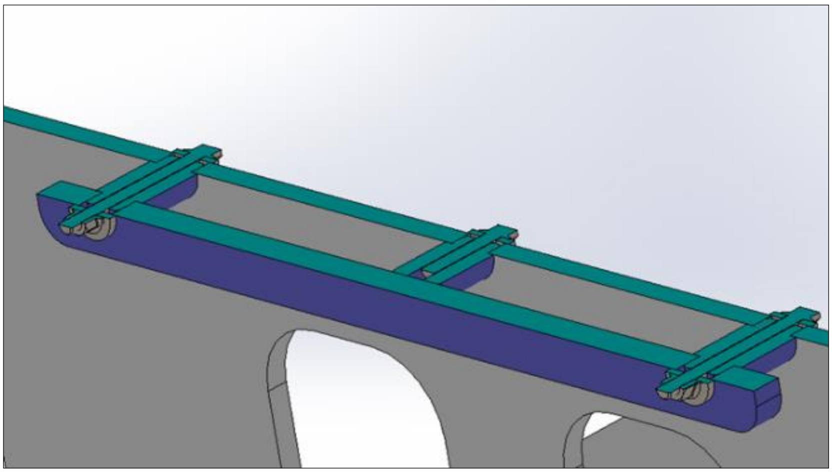

Figure 8.4. The sectional view of the safety plate

There are four Ø 30 mm holes on the right and left sides of the vertical plate. Four locating pins are placed on the front side of the vertical plate so that the Ø 30 mm flange will be inside holes. Then, the fixation of the locating pins is conducted from the backside of the vertical plate by using four washers (DIN 6340-13) and M12x80 bolts (DIN 6921). Details of this preparation are given in Figure 8.5.

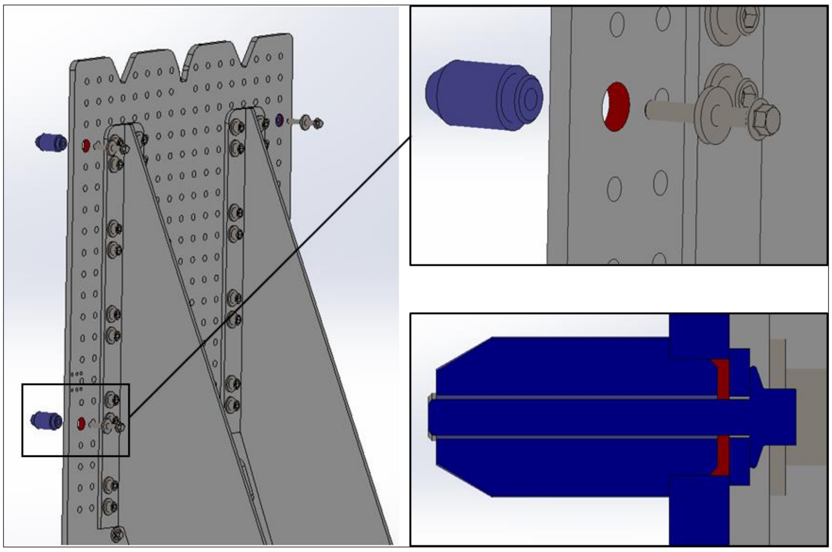

Figure 8.5. Assembled locating pins

In Figure 8.6, there are six M8 threaded holes on the right and left the side of the vertical plates for toggle clamps installation.

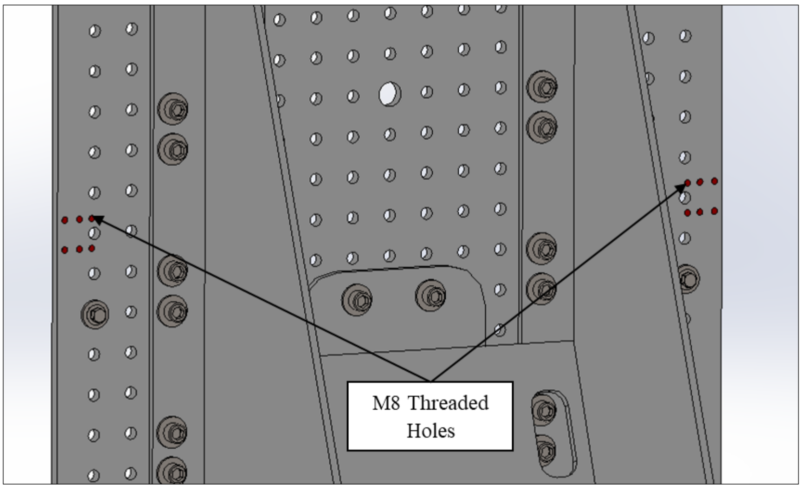

Figure 8.6. Back view of the fixture

As seen in Figure 8.7, four M8x16 bolts (ISO 4762) are used in order to fasten the toggle clamps from slots. There are two installed toggle clamps with 10 KN exerting force and 11 KN holding capacity.

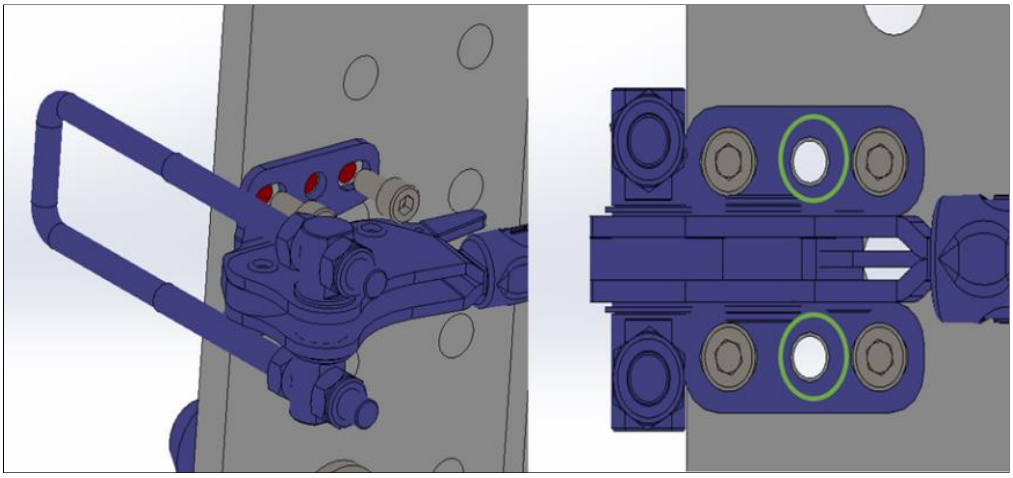

Figure 8.7. Installation of toggle clamps

### 8.2.2. Preparations on the Test Sample

After the preparations on the fixture are finished, it is also required to prepare the test sample side for easy connection. For this preparation, the connecting plate which is utilized to connect the vehicle rear compartment to the fixture is used.

Three centering studs and two L-brackets with clamp holders are assembled on the connecting plate, as shown in Figure 8.8. The centering studs are fixed to the connecting plate from the vehicle side by using spring (conical) washers (DIN 6796-24) and M20 nuts (DIN EN 1664).

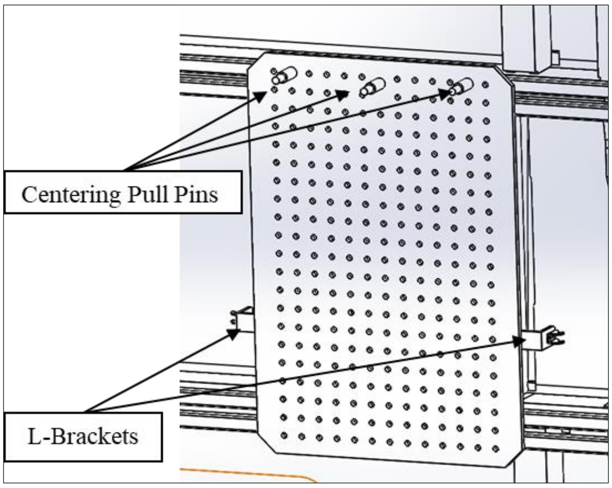

Figure 8.8. Preparation on the connecting plate

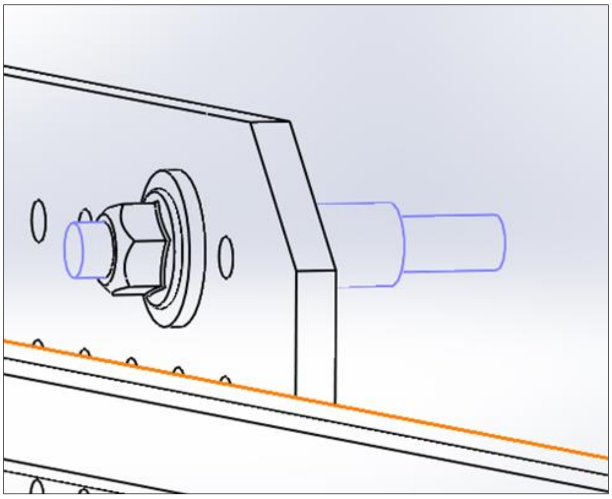

Figure 8.9. Installation of centering studs

There are eight Ø15 mm holes (with M16 threads) on the left and right side of the connecting plate at 700 mm and 800 mm from the top side of the connecting plate. Each L-bracket is fixed with four M16x20 mm bolts by using slots, as shown in Figure 8.10. As seen in Figure 8.11, preparation of the fixture side and the vehicle side is completed. The technical drawing about fastening the test sample to the fixture is given in Appendix C.

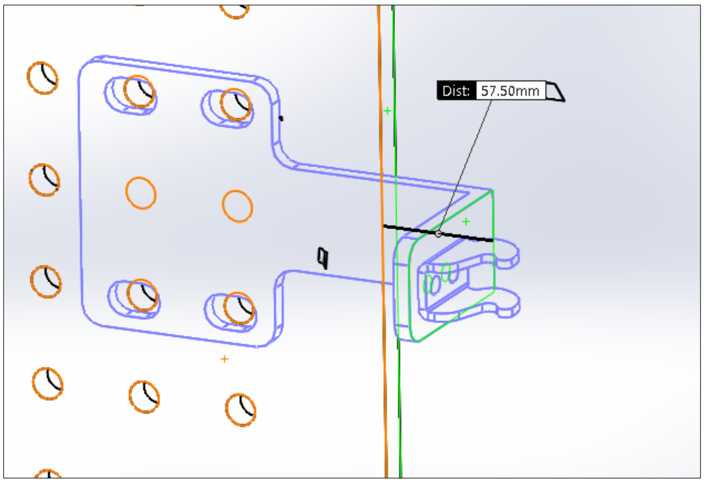

Figure 8.10. Installation of L-brackets to the connecting plate

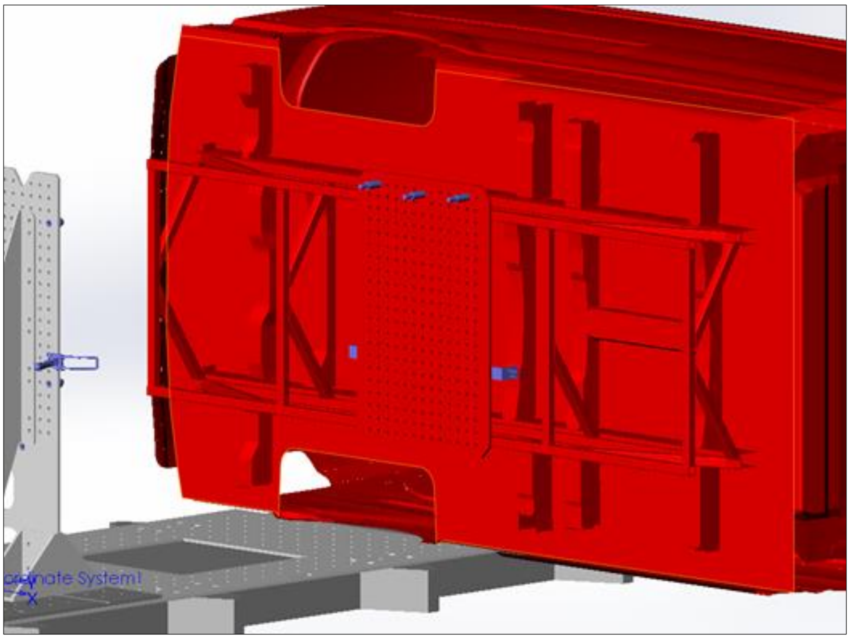

Figure 8.11. Final view of the fixture and the test sample

## 8.3. Assembly Operations

Once the final fixation solution for test fixture is achieved, the main steps of assembly operation are presented in this section.

1. The vehicle rear compartment is held with four ropes of two independent overhead cranes.
2. Then it is moved according to the sled and the mounted vertical test fixture positions (Figure 8.12).

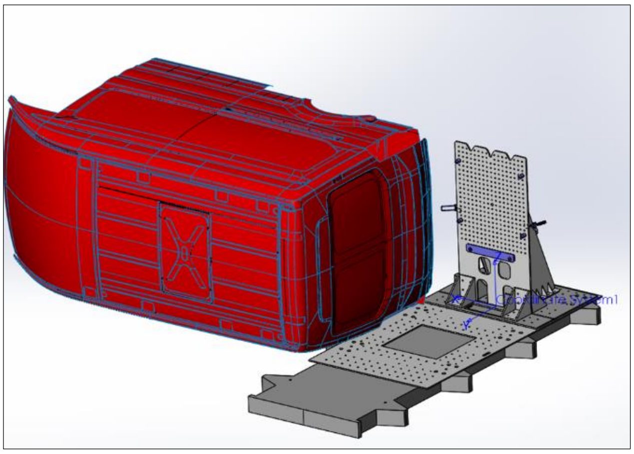

Figure 8.12. First operation

3. In the second operation, the vehicle rear compartment is moved in the negative x-direction (Figure 8.13).
4. YoZ plane of the vehicle rear compartment is expected to the with the test fixture YoZ (symmetry) plane.

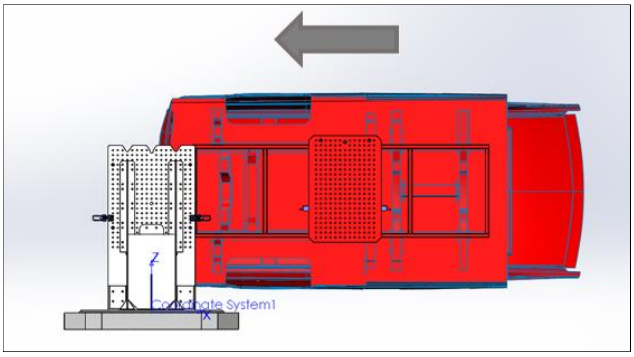

Figure 8.13. Second operation

5. The vertical connecting plate is expected to be perpendicular to the y-axis. In other words, the connecting plate is to be parallel to the vertical plate of the fixture (Figure 8.14).
6. Use two cranes and a water gage if necessary.

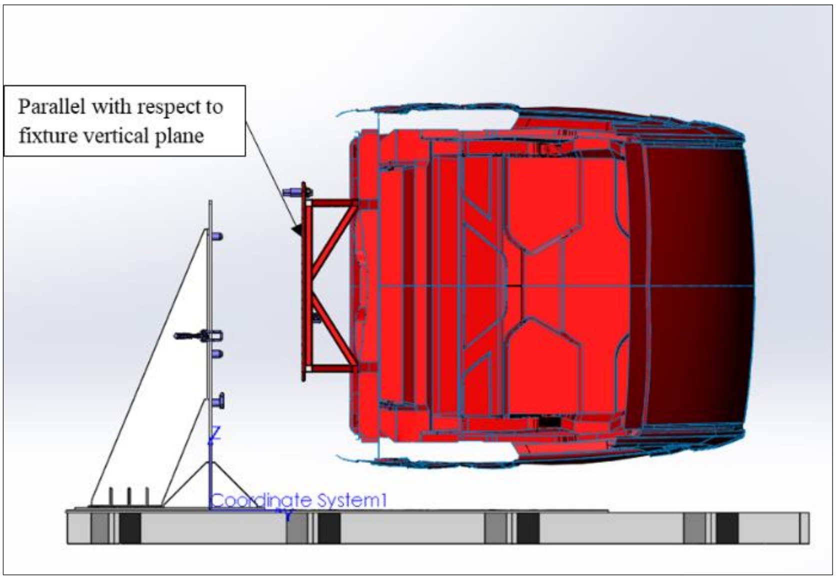

Figure 8.14. Third operation

7. In the fourth operation, the vehicle is moved in the negative y-direction (Figure 8.15).
8. The connecting plate must be above the safety plate (Figure 8.15).

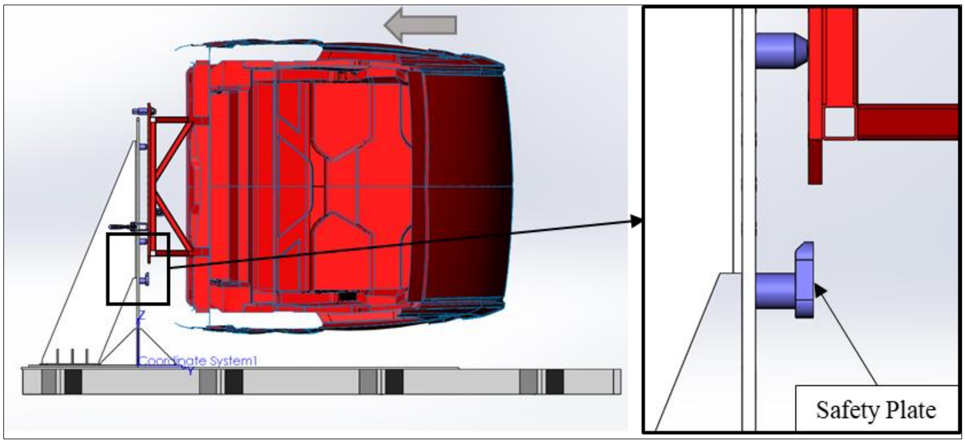

Figure 8.15. Fourth operation

9. The connecting plate must enter inside the four locating pins.
10. During this operation, the movement should be carefully observed from both sides of the fixture.

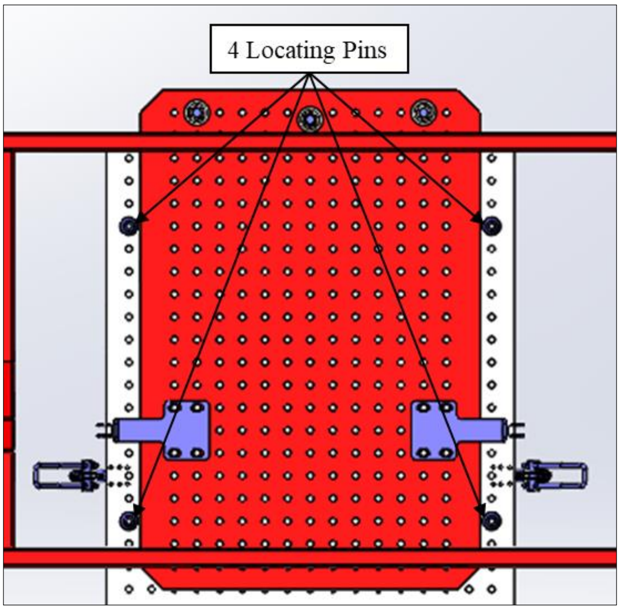

Figure 8.16. Fourth operation

11. At the end of the fourth operation, the connecting plate must be inside the four locating pins and the safety plate (Figure 8.16).
12. The two vertical plates are expected to touch each other (Figure 8.17).

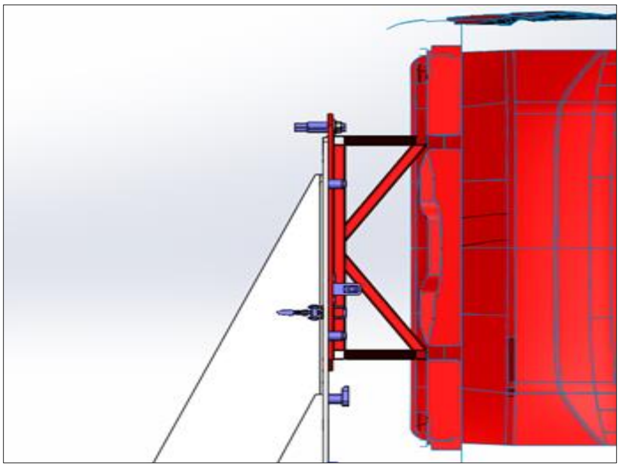

Figure 8.17. Fourth operation

13. Then, the vehicle patient rear compartment is moved in negative z-direction (Figure 8.18).
14. It should be checked that the three centering studs at the top of the connecting plate are inside the V-slots (Figure 8.19).
15. It should be checked that the connecting plate is still inside in the safety plate and touching on two pins on the bottom left and right (Figure 8.19).

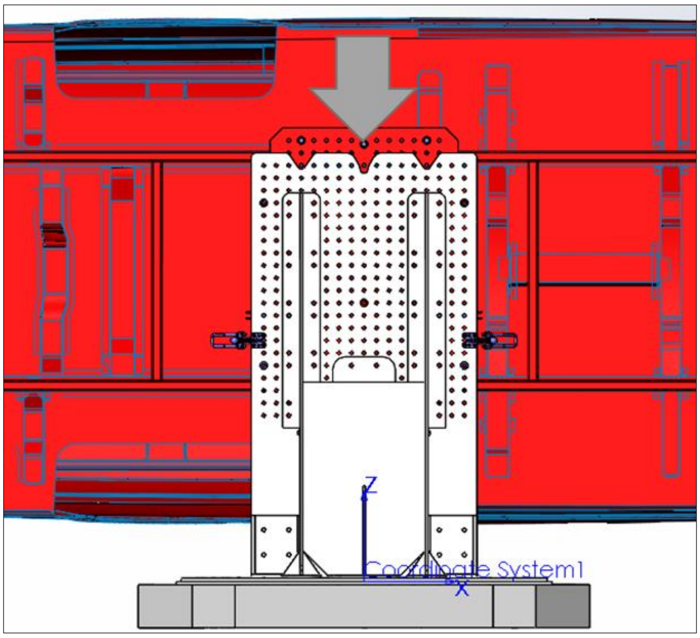

Figure 8.18. Fifth operation

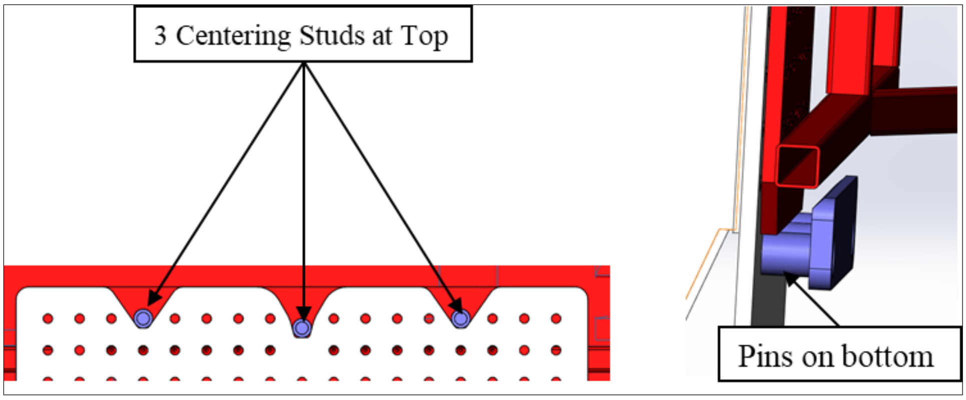

Figure 8.19. Control points for the fifth operation

16. In this step, two toggle clamps on sides should be locked (Figure 8.20).
17. At the end of this operation (Figure 8.21), the vertical plates are expected to be face to face.
18. If there is a gap between the vertical plates, two cranes should be used for alignment.

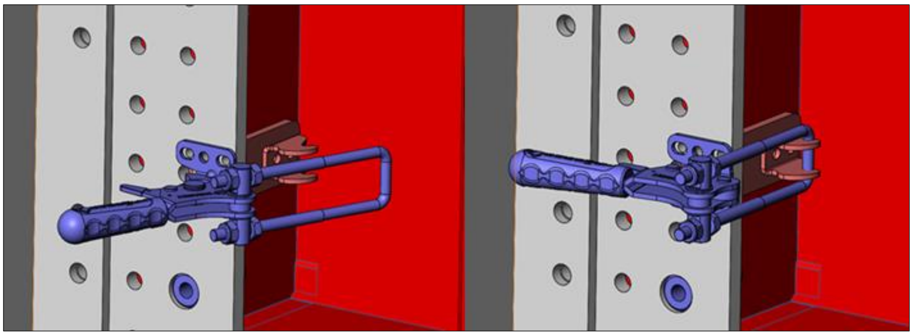

Figure 8.20. Locking of toggle clamps

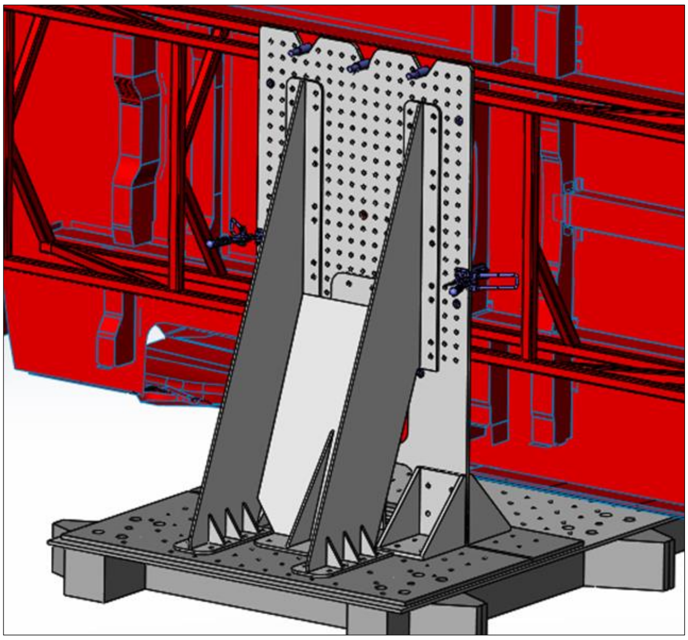

Figure 8.21. Sixth operation

19. Rings, Washers and M20 nuts should be placed to the three centering studs to fix the plates (Figure 8.22).
20. Nuts should be fixed by starting from the center.
21. At the end of this operation (Figure 8.23), the two vertical plates are guaranteed to be face to face without clearance between pieces.
22. The final assembly is shown in Figure 8.24.

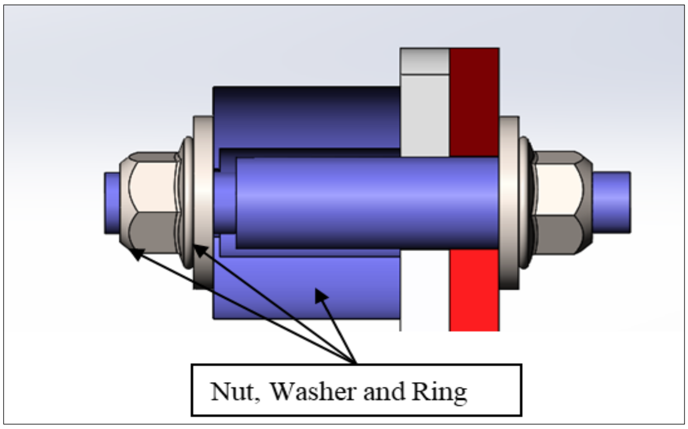

Figure 8.22. Assembly of nut, washer and ring

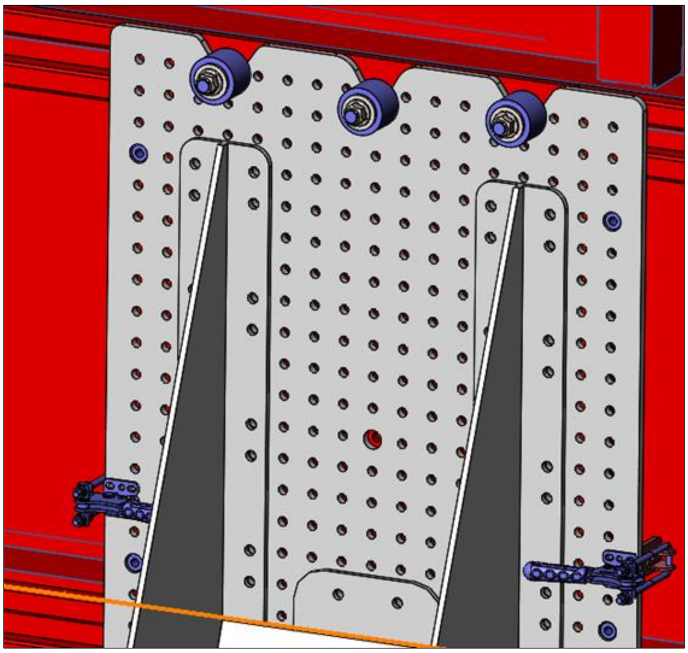

Figure 8.23. Seventh operation

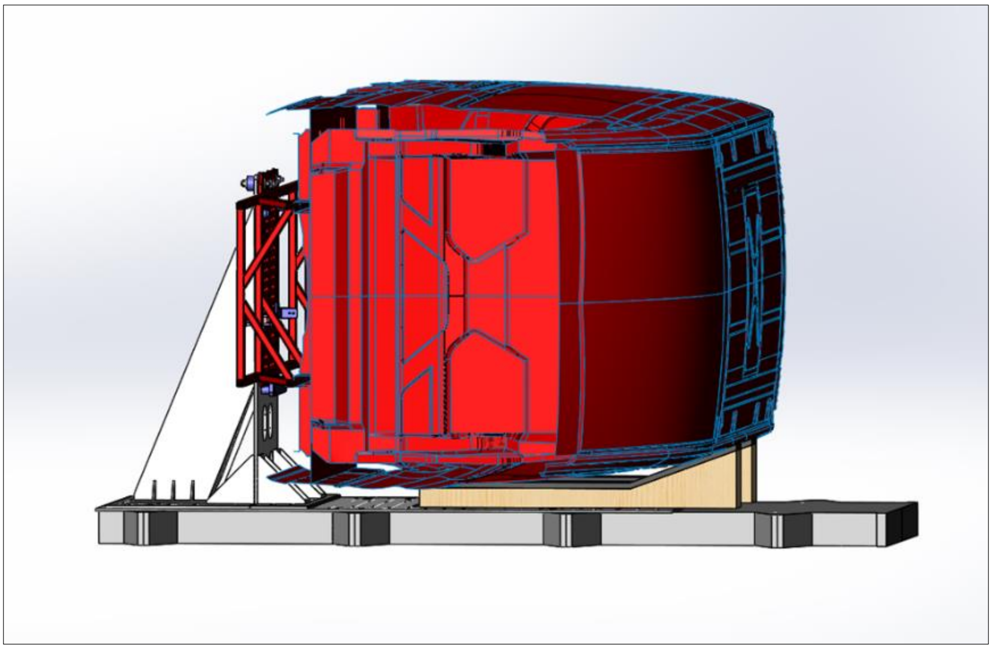

Figure 8.24. The final image of the full assembly

# CHAPTER 9

# CONCLUSION AND FUTURE WORKS

## 9.1. Conclusion

In this thesis, firstly the published safety/crashworthiness standards, limited safety and crashworthiness researches for ambulances are reviewed to discuss undefined topics or missing issues about occupant safety of EN 1789 + A2.

As stated in the previous chapters, interpretation of the dynamic test described in the EN standard causes ambiguities during the preparation and conducting of the dynamic test and evaluation of the test results. To avoid the ambiguities, the new dynamic testing procedure, which includes sample preparation, test process, post-test inspection and evaluation of test results is proposed. In the test procedure, preparation of main stretcher fixation on the vehicle floor, medical device fixation, storage compartments (cabinets, drawers) is illustrated with flow charts and examples. For post-test inspection, the list is prepared in order to determine inspection points that need to check after the dynamic test. At the end of the procedure, the test results evaluation table is presented along with the severity grading categorization. By the proposed dynamic testing procedure, uncertainties have been eliminated.

The EN standard requires dynamic tests under five axes to verify the strength of mounting and fixation systems of the ambulance patient compartment. Experience of METU-BILTIR Center Vehicle Safety Unit Test Engineers has shown that the fixture in the vertical direction is critical.

The rigidity and strength of the test fixture are significant because it must remain attached to the sled with the test sample during the test. The currently used test fixture is modeled to perform FEA study for this particular fixture. The simulation of the vertical test fixture is completed, and the simulation results are discussed and compared with the conducted actual test results. It is demonstrated that the FEA results reflect similar behavior of the currently used test fixture with the actual test results. Thus, the FEA results are found to be reliable and new designs may developed and analyzed using similar modeling techniques. From both the FEA results and actual test observations development necessities are discussed for the currently used test fixture.

In order to develop new alternative test fixtures, objectives are determined and constraints are examined. According to design inputs, three alternative test fixtures are generated and analyzed. According to the comparison of the FEA results, the newly designed fixtures are better than the currently used test fixture and improvements are achieved according to the design objectives. However, comparison data between the three alternatives proves that the third alternative test fixture performs best.

Finally, the clamping method is proposed to ease fastening of the fully-equipped patient compartment to the sled.

## 9.2. Future Works

Future work can be suggested for this particular study as follows:

- Proposed alternative test fixtures can be manufactured so the performance of fixtures can be verified in the actual test condition.
- Proposed fixtures can be studied with light weight material in order to decrease mass.
- Dynamic tests and simulations can be conducted with different pulses which are proposed by SAE recommended practices to see differences.
- Dynamic test can be conducted by using dummies with sensors in order to understand biomechanics of occupant in the ambulance patient compartment environment.

# REFERENCES

[1] C. Çalışkan, H. Koçak, and K. Arberk, “An Overview of Pre-hospital In-service Trainings by Emergency Medical Service in Turkey,” *Austin Emerg. Med.*, vol. 2, no. 4, 2016.

[2] D. B. B. Başara, İ. S. Çağlar, A. Aygün, and Ö. T. Adem, *Health Statistics Yearbook 2017*. General Directorate of Health Information Systems, Ministry of Health, 2018.

[3] A. Eksi, S. Celikli, and I. Catak, “Effects of the institutional structure and legislative framework on ambulance accidents in developing emergency medical services systems,” *Turkish J. Emerg. Med.*, vol. 15, no. 3, pp. 126–130, 2015.

[4] N. Smith, “A National Perspective on Ambulance Crashes and Safety,” *EMS World*, vol. 44, no. 9, pp. 91–2, 94, 2015.

[5] G. Ersoy, O. Ersoy, O. Yuksekbas, G. Kurnaz, E. U. Akyildiz, and S. Ekemen, “Why did the patient die? the relationship between ambulance accidents and death of patients: Forensic medical issues,” *J. Forensic Leg. Med.*, vol. 19, no. 8, pp. 474–479, 2012.

[6] Anadolu Ajansı, “Ambulance Accident,” 2016. [Online]. Available: https://www.ntv.com.tr/turkiye/rizede-ambulans-kaza-yapti-1-olu-5-yarali,Yc-tckShK0O0j6zOXS2P_w. [Accessed: 18-Jul-2019].

[7] Dlouhy GmbH Austria, “Mobile Systems for Life and Safety.” [Online]. Available: https://www.advantageaustria.org/vn/events/Dlouhy.pdf. [Accessed: 18-Jul-2019].

[8] D. E. Slattery and A. Silver, “The hazards of providing care in emergency vehicles: An opportunity for reform,” *Prehospital Emerg. Care*, vol. 13, no. 3, pp. 388–397, 2009.

[9] Dlouhy Austria, “Ambulance Project Toyota Commuter Highroof.” [Online]. Available: http://poolpan.com/dlouhy-ambulance-project/dlouhy-toyota-commuter-highroof-vehicle-overview/. [Accessed: 18-Jul-2019].

[10] D. S. and Technology, “Ambulance Patient Compartment Design Standards,” *Science and Technology*, 2015. [Online]. Available: https://www.dhs.gov/sites/default/files/publications/R-Tech_Ambulance-Standards-FactSheet_170714-508. [Accessed: 18-Jul-2019].

[11] E. L. Lee and W. C. Hayes, “Occupant accelerations and injury potential during an ambulance-to-curb impact,” *Forensic Sci. Int.*, vol. 237, pp. e6–e10, 2014.

[12] N. Levick, G. Li, and J. Yannaccone, “Development of a dynamic testing procedure to assess crashworthiness of the rear patient compartment of ambulance vehicles,” *Enhanc. Saf. ...*, pp. 1–8, 2001.

[13] CEN/TC 239 Rescue Systems, “TS EN 1789+A2 Medical vehicles and their equipment - Road ambulances,” 2014.

[14] M. Fournier, H. Chenaitia, C. Masson, P. Michelet, M. Behr, and J. P. Auffray, “Crew and patient safety in ambulances: Results of a personnel survey and experimental side impact crash test,” *Prehosp. Disaster Med.*, vol. 28, no. 4, pp. 1–6, 2013.

[15] N. R. Levick, B. R. Donnelly, A. Blatt, G. Gillespie, and M. Schultze, “Ambulance crashworthiness and occupant dynamics in vehicle-to-vehicle crash tests: Preliminary report,” *Enhanc. Saf. Veh. Tech. Pap. Ser. Pap.*, vol. 452, 2001.

[16] National Highway Traffic Safety Administration (NHTSA), “Federal Motor Vehicle Safety Standard (FMVSS) 213.”

[17] National Highway Traffic Safety Administration (NHTSA), “FMVSS 208,” no. 208, pp. 551–568, 2001.

[18] R. S. Current, P. H. Moore, J. D. Green, J. R. Yannaccone, G. R. Whitman, and L. A. Sicher, “Crash Testing of Ambulance Chassis Cab Vehicles,” *Dyn. Control*, vol. 116, no. 724, pp. 776–0790, 2009.

[19] N. Levick and R. Grzebieta, “Usa Ambulance Crashworthiness Frontal Impact Testing,” no. 1, pp. 1–15, 2007.

[20] J. D. Green, “Improving EMS Worker Safety in the Patient Compartment,” 2017.

[21] N. Levick and R. Grzebieta, “Development of Proposed Crash Test Procedures For Ambulance Vehicles,” no. June 2016.

[22] J. Green and S. Webb, “Ambulance Crash Test Methods,” *NIOSH Science Blog*. [Online]. Available: https://blogs.cdc.gov/niosh-science-blog/2017/05/22/ambulance-safety/. [Accessed: 18-Jul-2019].

[23] SAE, “J2917 Occupant Restraint and Equipment Mounting Integrity – Frontal Impact Ambulance Patient Compartment,” *SAE Recomm. Pract.*, p. 30, 2016.

[24] SAE, “J3044 Occupant Restraint and Equipment Mounting Integrity - Rear Impact Ambulance Patient Compartment,” *SAE Recomm. Pract.*, vol. 1, pp. 11–14, 2010.

[25] SAE, “J2956 Occupant Restraint and Equipment Mounting Integrity – Side Impact Ambulance Patient Compartment,” *SAE Recomm. Pract.*, vol. 1, pp. 11–14, 2010.

[26] SAE, “J3102 Ambulance Patient Compartment Structural Integrity Test to Support SAE J3027 Compliant Litter Systems,” *SAE Recomm. Pract.*, p. 30, 2016.

[27] CEN/TC 239 Rescue Systems, “EN 1865-1,” 2015.

[28] SAE, “J3058 Ambulance Interior Storage Compartment Integrity,” *SAE Recomm. Pract.*, p. 30, 2016.

[29] SAE, “J3026 Ambulance Equipment Mount Device or Systems,” *SAE Recomm. Pract.*, p. 30, 2016.

[30] SAE, “J3059 Ambulance Patient Compartment Seated Occupant Excursion Zone Evaluation,” *SAE Recomm. Pract.*, 2016.

[31] SAE, “J3057 Ambulance Modular Body Evaluation-Quasi-Static Loading for Type I and Type III Modular Ambulance Bodies,” *SAE Recomm. Pract.*, 2018.

[32] TSE, “TS EN ISO/IEC 17000 Conformity assessment – Vocabulary and general principles,” 2004.

[33] M.-B. C. V. S. Unit, “Metu Biltir Web Page.” [Online]. Available: http://www.biltir.metu.edu.tr. [Accessed: 02-Jul-2019].

[34] Instron Structural Testing Systems GmbH, “IST Catapult Units for Crash Simulation System M 31-14209-EN Reference Manual Version B,” vol. 0, p. 10.

[35] T. Xu, X. Sheng, T. Zhang, H. Liu, X. Liang, and A. Ding, “Development and Validation of Dummies and Human Models Used in Crash Test,” *Appl. Bionics Biomech.*, vol. 2018, pp. 1–12, 2018.

[36] F. W. Kai-Uwe Schmitt, Peter F. Niederer, Markus H. Muser, *Trauma Biomechanis*. 2010.

[37] C. L. Rao, V. Narayanamurthy, and K. R. Y. Simha, *Applied Impact Mechanics*. 2016.

[38] Data Processing Vehicle Safety Workgroup, “Crash Analysis Criteria Description Version 1.6.2,” 2008.

[39] CEN-CLC/TC 3 “Quality management and corresponding general aspects for medical devices", “EN ISO 14971,” vol. 01, no. 112, 2013.

[40] T. Belytschko, W. K. Liu, and B. Moran, *Nonlinear Finite Elements for Continua and Structures*. .

[41] A. S. Bahman and F. Iannuzzo, *Computer-aided engineering simulations*. Elsevier Ltd., 2018.

[42] LSTC, *LS-DYNA Theory Manual*. 2019.

[43] R. Thuresson, “Finite element analysis of winding sequence for cable drums,” *Thesis*, 2015.

[44] K. H. Yang, *Basic Finite Element Method as Applied to Injury Biomechanics*. Elsevier Inc., 2017.

[45] S. R. W. and L. GU, *Introduction To The Explicit Finite Element Method For Nonlinear Transient Dynamics*. 2012.

[46] L. Pakiding, “Design criteria for high strength steel joints,” 2007.

[47] M. Dietenberger, M. Buyuk, and C. S. Kan, “Development of a High Strain-Rate Dependent Vehicle Model,” no. 1, pp. 1–10, 2005.

[48] M. Mortazavi and Y. Heo, “Nonlinear dynamic response of steel materials and plain plate systems to impact loads : Review and validation,” *Eng. Struct.*, vol. 173, no. January, pp. 758–767, 2018.

[49] CEN/TC 250, “EN 1993-1-1 Eurocode 3: Design of steel structures,” 2005.

[50] L.-D. Examples, “Wood Post.” [Online]. Available: https://www.dynaexamples.com/introduction/intro-by-j.-reid/wood-post. [Accessed: 24-Jul-2019].

[51] SAE, “J211-1 Instrumentation for Impact Test-Part 1: Electronic Instrumentation.”

[52] ISO/TC 22 Road vehicles, “ISO 6487 Road vehicles -- Measurement techniques in impact tests -- Instrumentation.”

# APPENDICES

## A. CAD MODEL OF THE VEHICLE COMPARTMENT

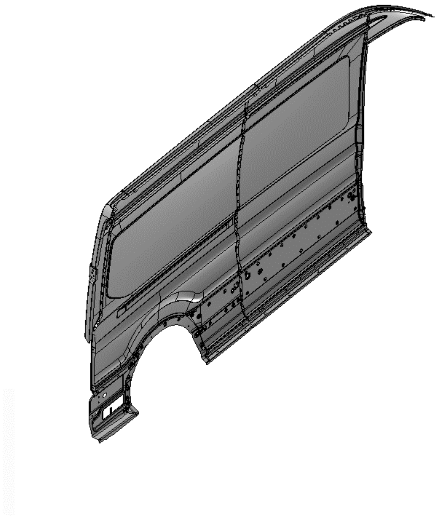

Figure A.1. Side Panel (Left) of Patient Compartment

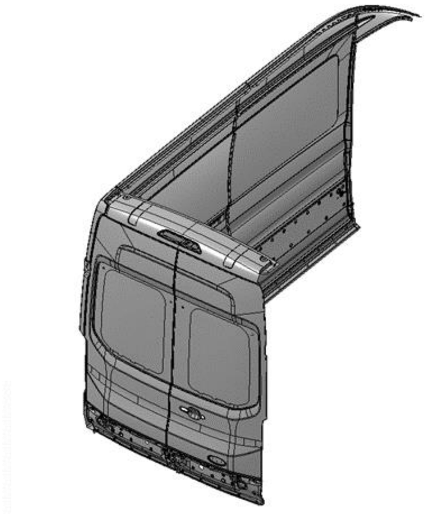

Figure A.2. Rear Door of Patient Compartment

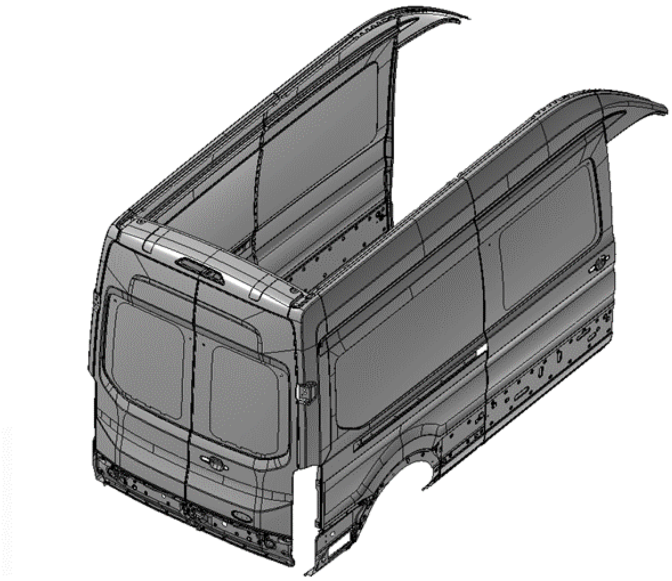

Figure A.3. Side Panel (Right) of Patient Compartment

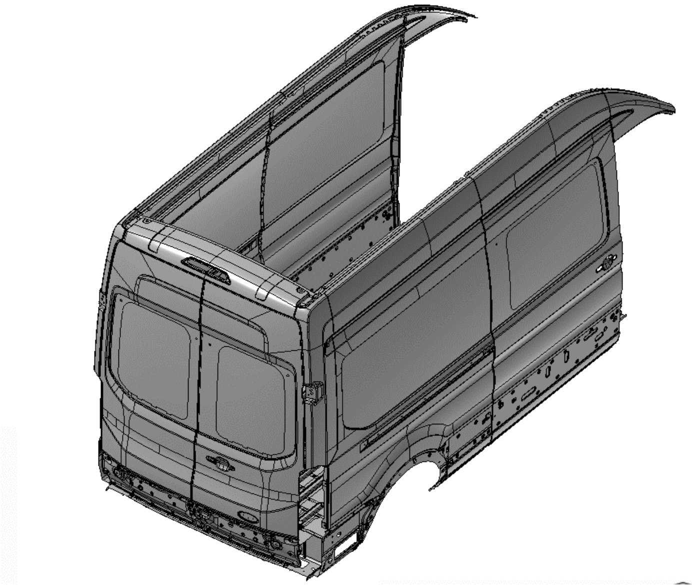

Figure A.4. Floor Panel of Patient Compartment

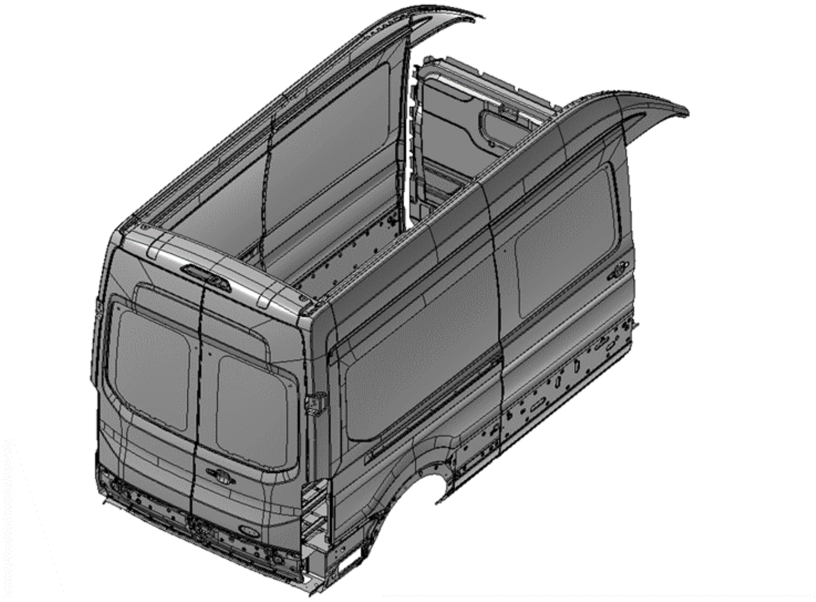

Figure A.5. Partition of Patient Compartment

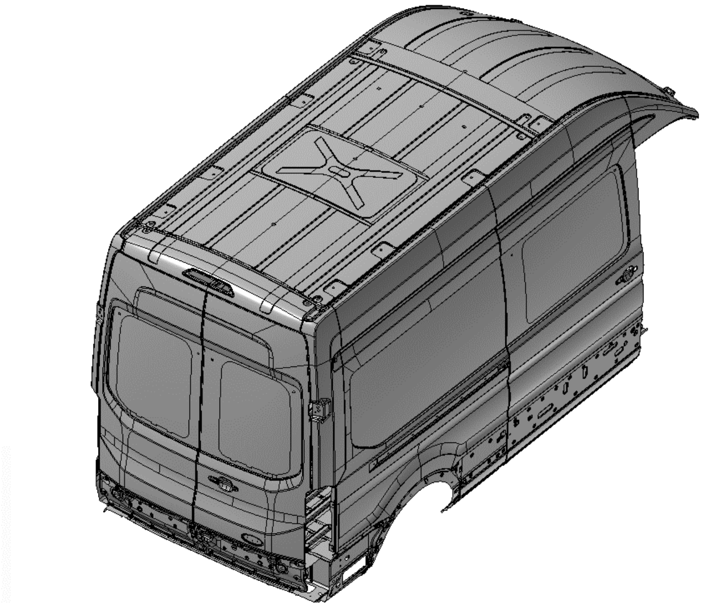

Figure A.6. Roof of Patient Compartment and Whole Body

## B. TECHNICAL DRAWINGS OF ALTERNATIVE TEST FIXTURES

1. The First Alternative Test Fixture

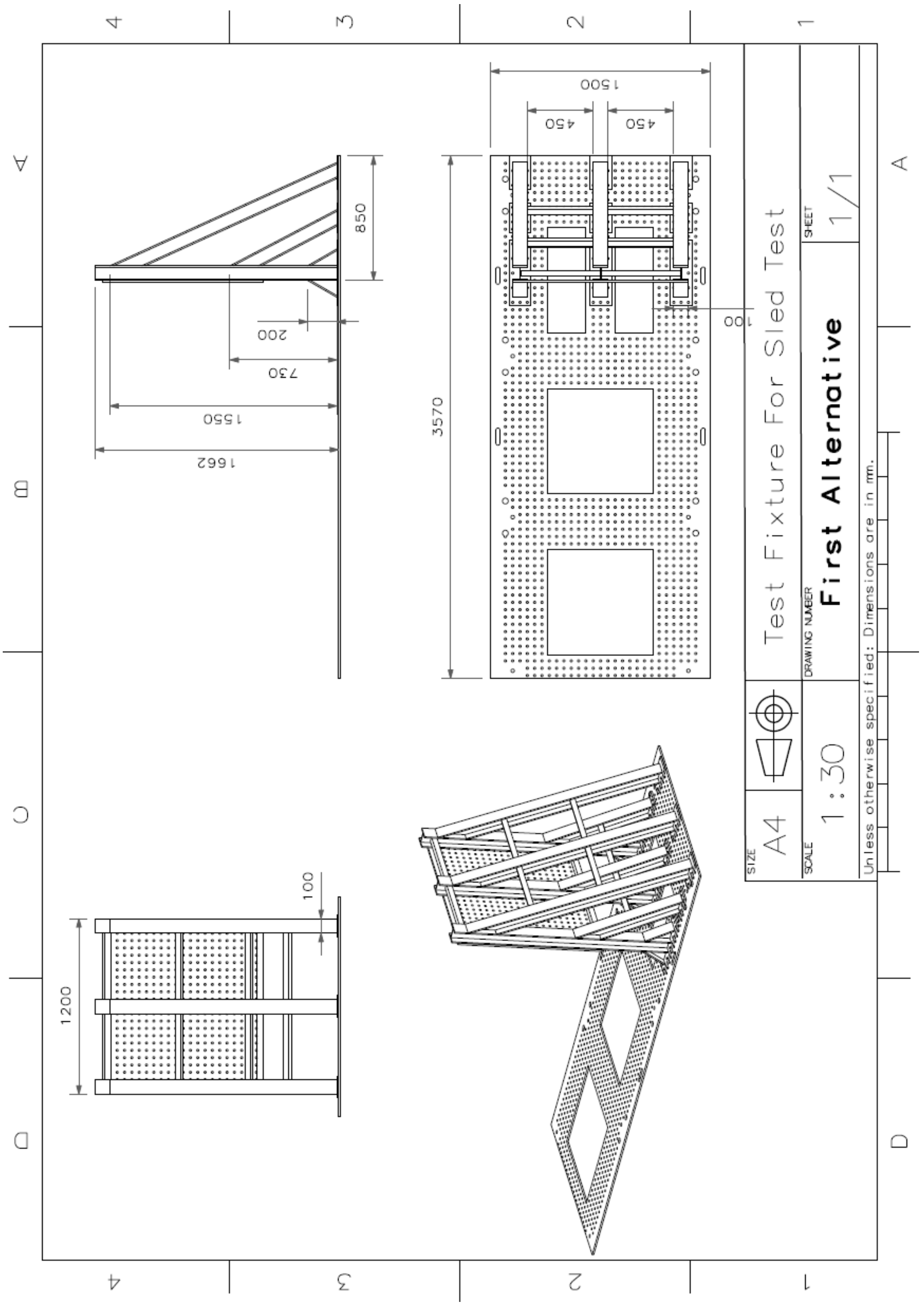

2. The Second Alternative Test Fixture

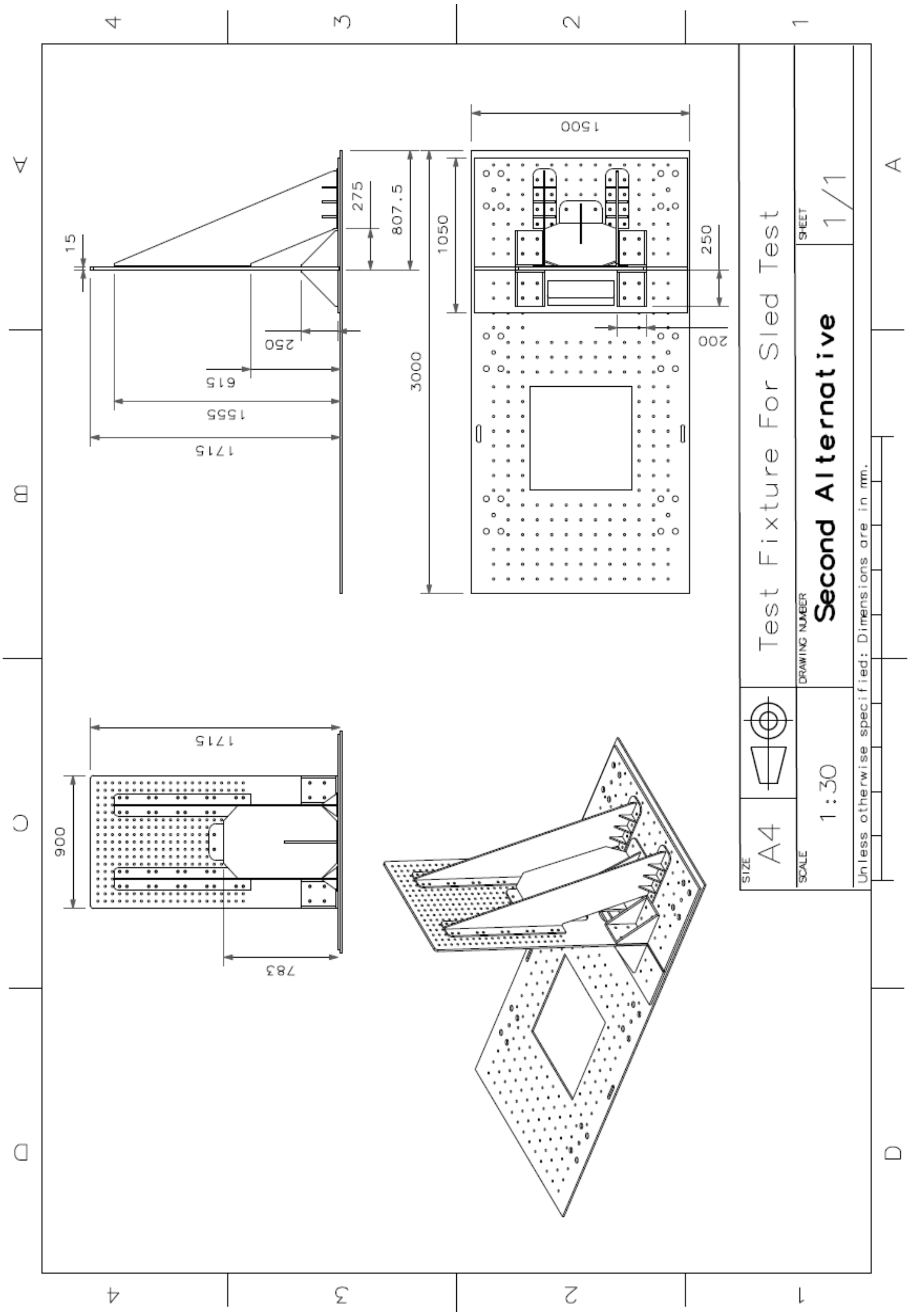

3. The Third Alternative Test Fixture

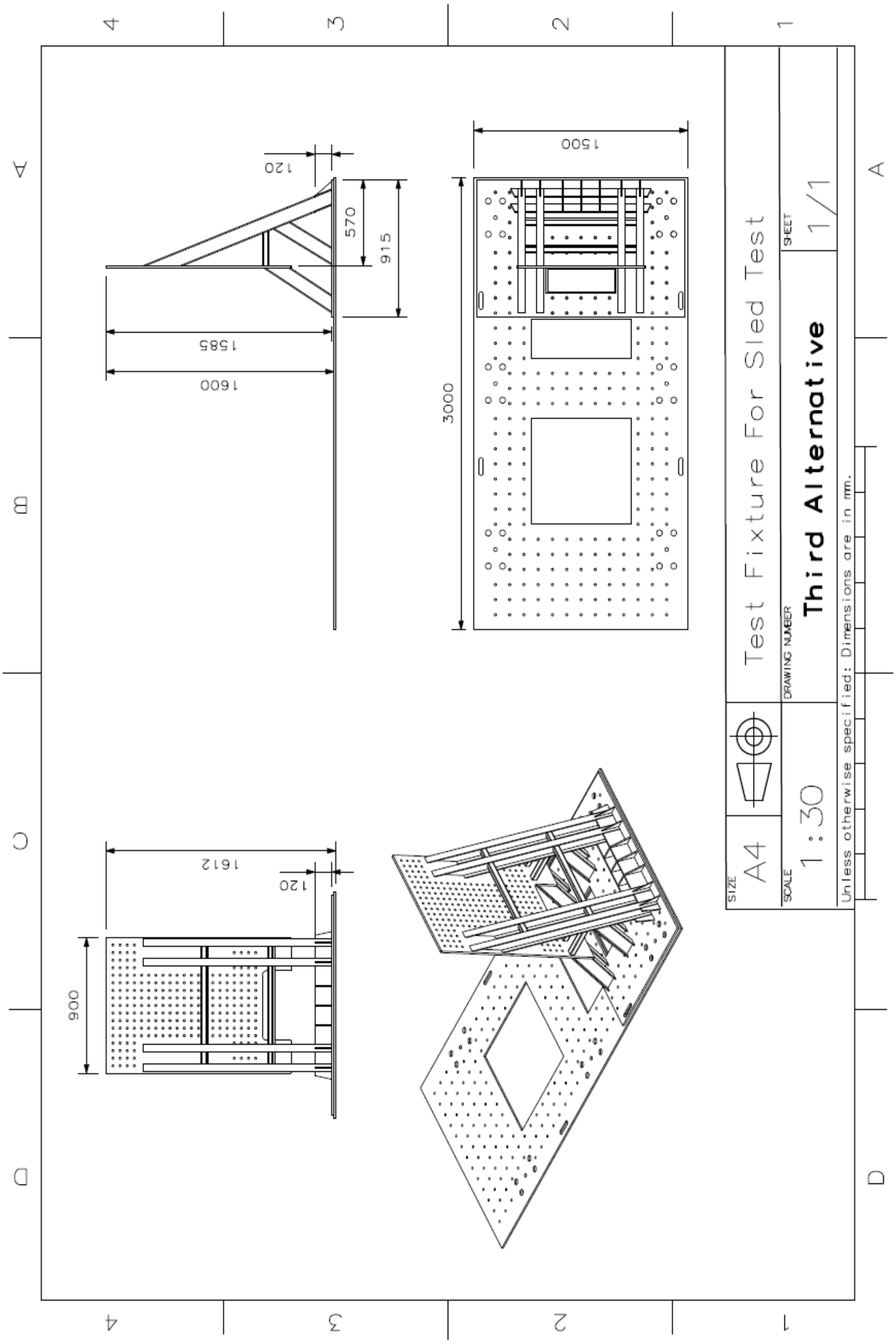

# C. TECHNICAL DRAWING OF FIXTURE ASSEMBLY

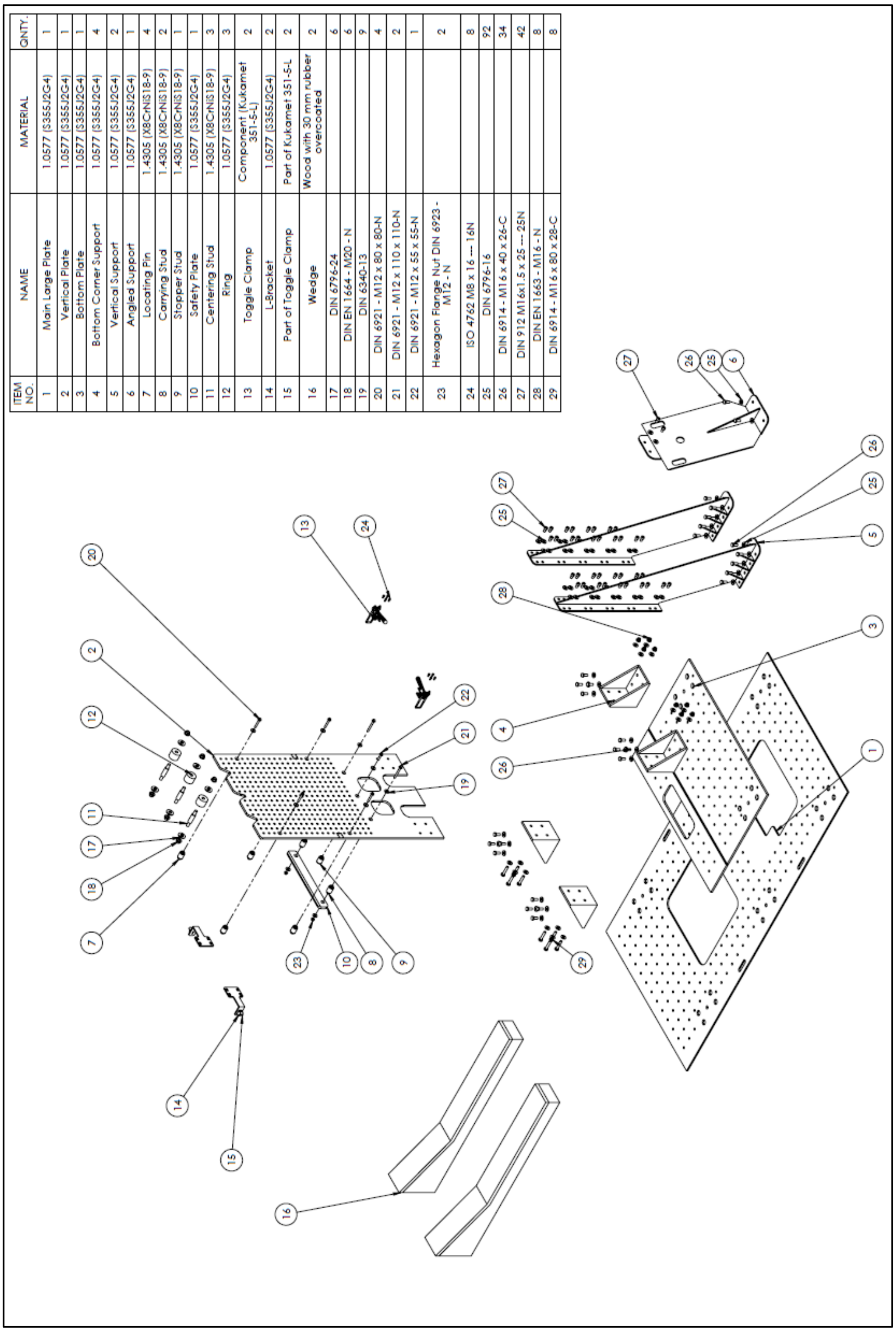

| ITEM NO. | NAME | MATERIAL | QNTY. |
|---|---|---|---|
| 1 | Main Large Plate | 1.0577 (S355J2G4) | 1 |
| 2 | Vertical Plate | 1.0577 (S355J2G4) | 1 |
| 3 | Bottom Plate | 1.0577 (S355J2G4) | 1 |
| 4 | Bottom Corner Support | 1.0577 (S355J2G4) | 4 |
| 5 | Vertical Support | 1.0577 (S355J2G4) | 2 |
| 6 | Angled Support | 1.0577 (S355J2G4) | 1 |
| 7 | Locating Pin | 1.4305 (X8CrNiS18-9) | 4 |
| 8 | Carrying Stud | 1.4305 (X8CrNiS18-9) | 2 |
| 9 | Stopper Stud | 1.4305 (X8CrNiS18-9) | 1 |
| 10 | Safety Plate | 1.0577 (S355J2G4) | 1 |
| 11 | Centering Stud | 1.4305 (X8CrNiS18-9) | 3 |
| 12 | Ring | 1.0577 (S355J2G4) | 3 |
| 13 | Toggle Clamp | Component (Kukamet 351-5-L) | 2 |
| 14 | L-Bracket | 1.0577 (S355J2G4) | 2 |
| 15 | Part of Toggle Clamp | Part of Kukamet 351-5-L | 2 |
| 16 | Wedge | Wood with 30 mm rubber overcoated | 2 |
| 17 | DIN 6796-24 | | 6 |
| 18 | DIN EN 1664 - M20 - N | | 6 |
| 19 | DIN 6340-13 | | 9 |
| 20 | DIN 6921 - M12 x 80 x 80-N | | 4 |
| 21 | DIN 6921 - M12 x 110 x 110-N | | 2 |
| 22 | DIN 6921 - M12 x 55 x 55-N | | 1 |
| 23 | Hexagon Flange Nut DIN 6923 - M12 - N | | 2 |
| 24 | ISO 4762 M8 x 16 --- 16N | | 8 |
| 25 | DIN 6796-16 | | 92 |
| 26 | DIN 6914 - M16 x 40 x 26-C | | 34 |
| 27 | DIN 912 M16x1.5 x 25 --- 25N | | 42 |
| 28 | DIN EN 1663 - M16 - N | | 8 |
| 29 | DIN 6914 - M16 x 80 x 28-C | | 8 |