DESIGN OF FIXTURING SYSTEM
FOR FORGING DIES

A THESIS SUBMITTED TO
THE GRADUATE SCHOOL OF NATURAL AND APPLIED SCIENCES
OF
MIDDLE EAST TECHNICAL UNIVERSITY

BY

ÖZGÜR CAVBOZAR

IN PARTIAL FULFILLMENT OF THE REQUIREMENTS
FOR
THE DEGREE OF MASTER OF SCIENCE
IN
MECHANICAL ENGINEERING

DECEMBER 2008

Approval of the thesis:

DESIGN OF FIXTURING SYSTEM
FOR FORGING DIES

submitted by **ÖZGÜR CAVBOZAR** in partial fulfillment of the requirements for the degree of **Master of Science in Mechanical Engineering, Middle East Technical University** by,

Prof. Dr. Canan Özgen
Dean, Graduate School of **Natural and Applied Sciences** _____

Prof. Dr. Süha Oral
Head of the Department, **Mechanical Engineering** _____

Prof. Dr. Mustafa İlhan Gökler
Supervisor, **Mechanical Engineering Dept., METU** _____

Examining Committee Members:

Prof. Dr. Orhan Yıldırım
Mechanical Engineering Dept., METU _____

Prof. Dr. Mustafa İlhan Gökler
Mechanical Engineering Dept., METU _____

Prof. Dr. Kemal İder
Mechanical Engineering Dept., METU _____

Prof. Dr. Haluk Darendeliler
Mechanical Engineering Dept., METU _____

Prof. Dr. Sinan Kayalıgil
Industrial Engineering Dept., METU _____

Date: December 16th, 2008

I hereby declare that all information in this document has been obtained and presented in accordance with academic rules and ethical conduct. I also declare that, as required by these rules and conduct, I have fully cited and referenced all material and results that are not original to this work.

Name, Last name: Özgür Cavbozar

Signature:

ABSTRACT

DESIGN OF FIXTURING SYSTEM FOR FORGING DIES

Cavbozar, Özgür

M.Sc., Department of Mechanical Engineering
Supervisor: Prof. Dr. Mustafa İlhan Gökler

December 2008, 148 Pages

In forging industry, the die setup starts with unloading the previous die set and ends with approval of the first part produced. During conventional die setup, forging press is kept idle. The aim of this study is to perform die changing applications of the 1000 ton forging press of Aksan Steel Forging Company in more systematic way to reduce the idle time.

The applicability of Single Minute Exchange of Dies (SMED) System and quick die locating methods have been studied. SMED classifies the setup operations as internal and external setup operations. During the internal setup operations the press is kept idle. Therefore it has been tried to reduce the internal setup time.

In this study, a new modular die system has been developed. The die system to be used for the forging press with 1000 ton capacity in Aksan Steel Forging Company has been redesigned regarding the dimensional limitations, requirements, SMED System and quick die locating methods. The modules of proposed die system and the dies for a particular forging part have been produced. Tests, observations and time studies have been carried out.

The time spent for alignment of the upper and lower dies on the press have been eliminated in the proposed system. The solutions have been proposed for the

frequently encountered problems of setup operations of the company and these have been applied in the system. In order to eliminate operator mistakes, marking applications have also been introduced and the application of die cavity revision has been renewed. During the time studies for the case study, it has been seen that the internal setup time of the forging press with 1000 ton capacity has been reduced from 220 minutes to 141 minutes which corresponds to a reduction of 36 %.

Keywords: Forging Dies, Die Design, SMED, Quick Die Change, Modular Die Set, Hot Forging

ÖZ

DÖVME İÇİN KALIP BAĞLAMA SİSTEM TASARIMI

Cavbozar, Özgür

Yüksek Lisans, Makina Mühendisliği Bölümü
Tez Yöneticisi: Prof. Dr. Mustafa İlhan Gökler

Aralık 2008, 148 Sayfa

Dövme endüstrisinde kalıp bağlama işlemi, bir önceki kalıp setinin sökülmesi ile başlayan ve seri imalat onayının alınması ile sonuçlanan bir işlemdir. Konvensiyonal kalıp bağlama işlemi süresince dövme presi üretim dışı kalır. Bu çalışmanın amacı, Aksan Çelik Dövme Sanayi'deki 1000 ton'luk dövme presinin kalıp değiştirme işlemlerini, üretim dışı kalan zamanı azaltmak için daha sistematik bir biçimde yapmaktır.

SMED olarak bilinen kısa zamanda kalıp değişim sisteminin uygunalabilirliği ve hızlı kalıp pozisyonlama teknikleri üzerinde çalışmalar yapılmıştır. SMED kalıp değiştirme operasyonlarını, iç ve dış kalıp değiştirme operasyonları olarak ikiye ayırır. İç kalıp değiştirme operasyonları süresince pres üretim dışı kalır. Bu yüzden iç kalıp değiştirme süresini azaltmak hedeflenmektedir.

Bu çalışmada, yeni bir modüler kalıp sistemi geliştirilmiştir. Aksan Çelik Dövme Sanayi'deki 1000 ton kapasiteli dövme presinde kullanılacak kalıp sistemi boyutsal sınırlamalar, gereksinimler, SMED Sistemi ve hızlı kalıp pozisyonlama teknikleri göz önünde bulundurularak yeniden tasarlanmıştır. Önerilen sistemin modülleri ve belirli bir dövme parçası için kalıplar üretilmiştir. Denemeler, incelemeler ve zaman analizleri yapılmıştır.

Önerilen sistem ile alt ve üst kalıbın pres üzerinde hizalanması için gerekli olan zaman sıfıra indirilmiştir. Kalıp değişimi sırasında firmada sıkça rastlanan sorunlara çözüm önerileri getirilmiştir ve bunlar yeni sistemde uygulanmıştır. Operatör hatalarını ortadan kaldırmak için markalama yöntemleri uygulanmıştır ve kalıp boşluğunun revizyon işlemlerinde yenilikler yapılmıştır. Örnek incelemelerdeki zaman analizlerinde, 1000 ton kapasiteli dövme presinin iç kalıp değiştirme süresinin 220 dakikadan 141 dakikaya düşürüldüğü gözlenmiştir. Bu da % 36'lık bir zaman tasarrufuna karşılık gelmektedir.

Anahtar Kelimeler: Dövme Kalıpları, Kalıp Tasarımı, SMED, Hızlı Kalıp Değişimi, Modüler Kalıp Seti, Sıcak Dövme

To my family,

ACKNOWLEDGEMENTS

I would like to express my deepest gratitude to my supervisor Prof. Dr. Mustafa İlhan Gökler for his guidance, advice, criticism, patience and insight throughout the study.

This thesis is an industry – university collaboration study, which has been supported by The Scientific and Technological Research Council of Turkey (TÜBİTAK) with National Scholarship Program for M.S. Students (Project No: 105M130). Special thanks go to TÜBİTAK for great guidance and financial support.

I wish to thank to Aksan Steel Forging Company. Thanks to Mr.Cevat Kömürcü, Mrs.Tülay Kömürcü, Mrs.Tülin Özkan, Mr.Yakup Erişkin, and Mr.Rahmi Türkmen from Aksan Steel Forging Company. The technical assistance of them is gratefully acknowledged.

I would like to thank to METU-BILTIR Research and Application Center for the facilities provided for my work. I also express sincere appreciation to Mechanical Engineering Department of METU for the facilities conducted in the study.

My special thanks go to my colleagues, Arda Özgen, Mehmet Cihat Özcan, Hüseyin Öztürk, Ulaş Göçmen, Gökhan Biçer and Derya Akkuş; to my senior colleagues Ender Cengiz, İlker Durukan, Mehmet Maşat, Sevgi Saraç and Kazım Arda Çelik for their valuable support and assistance.

Further, thanks go to Halit Şahin, Ali Demir, Hüseyin Ali Atmaca, Tarık Öden, Filiz Güngör Sutekin, Arzu Öztürk, Halime Küçük and Mehmet Ali Sarıhan for their endless efforts and aid.

I am deeply indebt to my parents Evşen Cavbozar and Atilla Cavbozar, my sister Özlem Soylu, brother-in-law Gültekin Soylu and my dearest fiance Pelin Yurtsever for their never-ending love and spiritual support at critical and opportune times.

TABLE OF CONTENTS

LIST OF TABLES

TABLES

LIST OF FIGURES

FIGURES

LIST OF SYMBOLS

SYMBOLS

x	: Dimension in X Direction
y	: Dimension in Y Direction
z	: Dimension in Z Direction
Ø	: Diameter

CHAPTER 1

INTRODUCTION

1.1 Forging Concept

Forging is the shaping of metal by localized compressive forces exerted by power hammers, presses, or special forging machines. In the forging process the metal may either be:

- Drawn out, thus increasing its length and decreasing its cross section
- Upset, resulting in increase in section and decrease in length, or
- Squeezed in closed impression dies, causing multi directional flow [1].

The shape is imparted by special tools, called dies. Starting from a simple shape like a billet, a bar or an ingot, the desired shape is obtained through a number of different deformation steps. Different deformation steps for a sample part can be seen in Figure 1.1 [1]. To attain a close similarity between pieces formed in this way requires skilled forge man, but the process has been simplified by the use of impression tools [2].

The deformation by forging can be done in hot, warm or cold working conditions.

Hot forging is the plastic deformation of metal at elevated temperatures (for steel about 1100 to 1250°C). Hot forging is carried out at such a temperature that it is lower than melting point but higher than the recristalization temperature of the material. Gas, oil, or electric furnaces usually are used. Requirement of heating, lower dimensional accuracy, extensional scale formation and necessity of larger tolerances are considered as main disadvantages of hot forming.

The temperature range for the warm forging runs from 800 to 1000°C for steel [3]. There are several advantages of warm forging compared to cold forging. Less tooling and press loads, increased steel ductility, elimination of annealing before forging are some of these advantages.

Cold forging is carried out at or near room temperature. Carbon and standard alloy steels are most commonly cold-forged materials because of economic advantages. In cold forging, production rates are very high with exceptional die life. Cold forging usually improves mechanical properties of the material. Cold forging is generally used for simple geometries.

Figure 1.1 Impression Drop Forging Dies, Products Resulting From Each Impression and the Trimmed Products [1]

Compared to other manufacturing processes, forging has many advantages because it helps to produce parts with superior mechanical characteristics with minimum waste of material. The products not only have uniform mechanical properties in almost all directions, but also free from undesirable internal voids. Moreover, the grain structure is refined by forging; hence it provides desirable directional properties such as tensile strength, fatigue strength, impact toughness, fracture toughness and ductility. In short, forging process can create stronger parts.

Actually all metals have alloys that can be forged. However, some of the most common metals include: carbon, alloy and stainless steels; very hard tool steels; aluminum; titanium; brass and copper; and high-temperature alloys which contain cobalt, nickel or molybdenum. Each metal has distinct strength or weight characteristics that best apply to specific parts as determined by the customer [4].

Regarding the strong machinery, dies, die holders and fixturing tools required for forging operations, forging process is not a cheap process for small batch sizes. Therefore this process is economically favorable when large quantity of parts is produced in mass production.

The properties provided by forging lead forged parts to be used in area where reliability and human safety are critical. In fact, forging is advantageous in safety related applications. The most common application areas are automotive, aerospace, national defense, construction, mining, pipeline, valves and fittings, material handling and general industrial equipment.

1.2 Forging Presses

Parts that are produced by forging can generally be shaped either by hammers or presses, and the processing characteristics of each type of equipment influence the behavior of the metal being forged.

Drop forging or hammer forging forces metal to give the shape of the die cavities by the application of repeated blows. When forging dies are fastened to the ram and the anvil assembly, and a workpiece is placed between them, the striking force is imposed on workpiece by a vertical movement of weighted ram, causing it to deform plastically with each successive blow, thus providing a forged configuration [5]. The hammer is an energy-restricted machine because hammers derive their energy from the potential energy of the ram, which is then converted to kinetic energy. The deformation proceeds until the total kinetic energy of the ram is dissipated by plastic deformation of the forging stock and elastic deformation of ram and anvil. Some sorts of forging hammers are power drop hammers, gravity drop hammers and counterblow hammers.

Press forging performs the same function but with a single stroke. Depending on their actuation and power sources, forging presses are classified as mechanical or hydraulic presses. Actually, forging presses can produce all types of forging parts produced by hammers. On the other hand, less noise and vibration is developed compared to forging hammers.

Mechanical presses are driven by a motor and controlled by an air clutch; they are full eccentric type of drive shaft that imparts a constant stroke to a vertically operating ram [5]. It is based on slider-crank mechanism where rotary motion of the flywheel is translated into reciprocating linear motion of the ram. Therefore mechanical presses are displacement-restricted machines. The eccentric shaft is directly connected to the flywheel through a clutch and a brake system. The ram stroke of mechanical forging machine is shorter than that of hammer or hydraulic press. Ram speed has its maximum level at the center of the stroke, and zero at the bottom. The pressure is greatest at the bottom of the stroke. Capacities range from about 300 to 8000 ton. Mechanical press is illustrated schematically in Figure 1.2 [6].

Ram of a hydraulic press is driven by hydraulic cylinders and pistons. The linear motion of a hydraulic piston guided in a cylinder as illustrated in Figure 1.3 [7]. Hydraulic presses are load-restricted machines because the capability is limited mainly by

the maximum available load. Pressing speed can be controlled, permitting the control of metal flow velocity. In hydraulic presses, the maximum press load is available at any point during the entire ram stroke. This feature is advantageous in producing close tolerance forgings. Capacities of hydraulic press range from 300 to 50000 ton [5].

Production rates of presses are comparatively high according to production rates of hammers. Less massive dies and weaker tool steels can be used in presses compared to hammers because the impact forces are less in presses.

More information about forging machines and equipment can be found in several publications [2, 5 - 7].

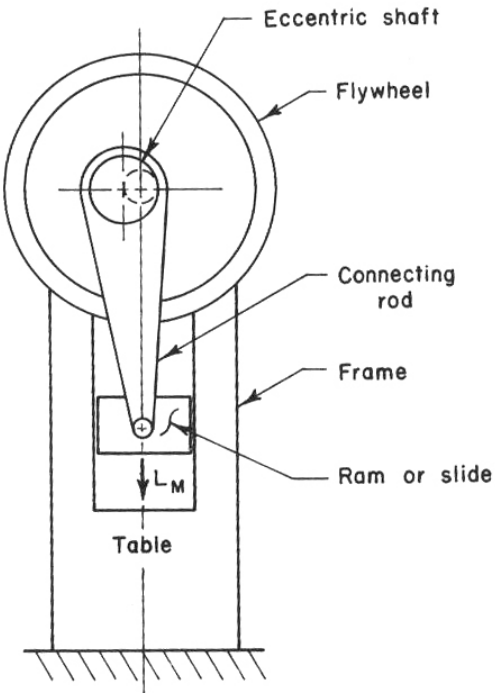

Figure 1.2 Mechanical Forging With Eccentric Drive [6]

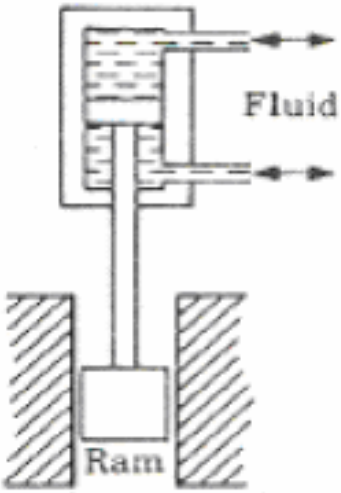

Figure 1.3 Hydraulic Press [7]

In screw presses, energy which is arisen from friction, gear, electric or hydraulic drive, accelerates a flywheel and its assembled components. As can be seen in Figure 1.4 [7], angular kinetic energy of the flywheel is converted to linear energy of the ram by the help of a vertical screw. Screw presses are energy-restricted.

There are many factors to be considered before the selection of appropriate forging machine. The size, weight and material types of the part are main considerations for a production; moreover a producer should also consider quality and quantity of desired production and also economic functions of machines to be used.

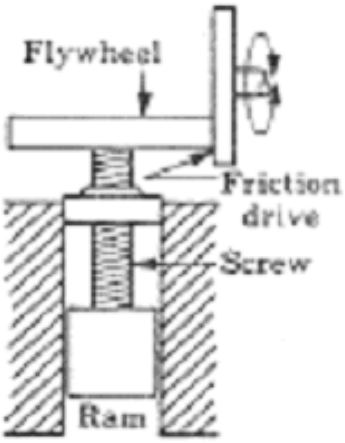

Figure 1.4 Screw Press [7]

1.3 Forging Dies

All hot forging operations are carried out by employing either plain (flat) dies or closed-impression dies. In literature, the forging operations accomplished by plain (flat) dies are called open die forging. In open die forging, hot plastic metal is not shaped to exact form and dimensions required, because the dies have no impressions and flow of

material is not confined. But they provide a certain amount of development in metal quality. In open die forging, operator should obtain the desired shape by orienting and positioning the workpiece between the blows. Tooling of open die forging is easy compared to closed-impression dies.

In closed-impression forging (or closed die forging), there are impression sunk in the faces of the dies for the purpose of forming metal by pressure to desired shape and dimensions. In this method, the direction and concentration of the inherent structure of metal is controlled. Besides, satisfactory improvement in properties and quality of material can also be obtained. A small amount or material flows outside the die impression and forms 'flash'. It is the excess of material required to fill the sunk. The majority of forging production including complex shapes and closer tolerances are usually performed by closed die forging.

Die wear is inevitable in forging. Total elimination of wear is not possible, however its corruptive effects can be minimized by carefully designed dies and tools, provision for a smooth progression in the shape of the forging from one die sunk to the next, adequate selection of die material and hardness, selection of correct forging machine, selection of adequate lubrication type and selection of proper heating technique and temperature.

Die life also depends on variety of factors like workpiece and billet material, appropriate workpiece design, die material hardness, driving equipment type and forging temperature. Excessive flash thickness additionally decreases the die life, since it causes extremely high die pressures in the flash area. This high pressure reduces die life and increases required power.

1.4 Current Die Changing Methods

As discussed in previous sections, the parts produced with forging usually formed to final shape in multi-stage operations. According to geometry of part,

preforming and final forging die inserts for both upper and lower dies are designed and produced. Those forging die inserts are placed into the die insert envelopes which are called 'cassette' and die sets are generated. Figure 1.5 indicates the cassettes and dies sets. The die sets (both upper and lower) are fixed to the die holders. The upper die holder is fixed to the ram of the forging press and lower die holder is fixed to the anvil bolster of the press.

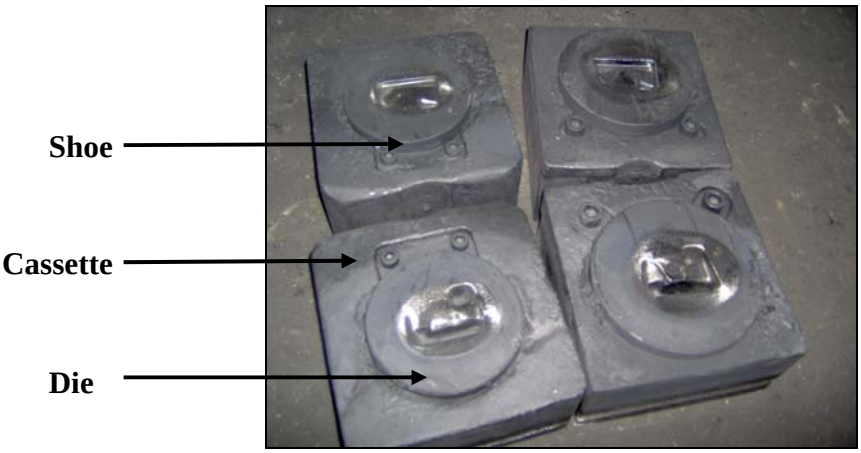

Figure 1.5 The Cassettes and the Dies of 1000 Ton Press in Aksan Steel Forging Company

Die setup starts with unloading the previous die set and ends with approval of the first part produced. For a traditional forging operations die change and setup steps can be defined in 5 main steps as following:

- Preparation: Ensures that all the dies are designed properly.
- Mounting & Dismounting: Involves removal of the dies and the related apparatus after production lot is completed and placement of new die sets.

- Establishing Control Settings: All kinds of settings including calibrations and measurements such as centering, measuring temperature and so forth.
- First Run Capability: This includes necessary adjustments (re-calibrations, additional measurements) required after first trial pieces are produced.
- Setup Improvement: Includes the time after processing during which the dies are cleaned, identified, and tested for functionality prior to storage.

Aksan Steel Forging Company, the supporter of this project, has three different forging presses with 1000 ton, 1600 ton and 4000 ton capacities. During setup and changing operations of any of those presses in Aksan Steel Forging Company, the particular press is kept idle and this automatically reduces the productivity. The setup time in the company is 3.5 hours on average [8]. Time setup time is described as the time spent during the press is not working. The setup times of 1000 ton Stankoimport press (Russian made) of Aksan Steel Forging Company are tabulated in Table 1.1.

In Aksan Steel Forging Company, when the previous lot is finished and the new die set of the next production lot is required to be mount or when the current die set requires revision, it is supposed to unfasten all the apparatus including the cassettes and dies from the ram and anvil of the press.

In current application, the cylindrical dies to be used in 1000 ton press of Aksan Steel Forging Company can have three different outer diameters which are 147 mm, 167 mm and 177 mm according to dimensions of the part to be produced. There are three different rectangular cassettes which have suitable holes for the cylindrical dies. The outer geometry of those cassettes is constant, and it is 235 x 225 x 120 mm. As can be seen in Figure 1.5, each die is fastened to appropriate cassette by help of the shoes and at least 2 bolts. Afterwards, cassettes are fixed to ram and anvil of the press by the help of die holders and shoes [8].

Table 1.1 Setup Times for 1000 Ton Press of Aksan Steel Forging Company

	Setup Times (min.)	Condition of the Press During Setup
Mounting Dies into Cassettes	29.5	Working
Dismounting Die-Cassette Pairs from Die Holders	25	Not Working
Mounting Die-Cassette Pairs to Die Holders	135	Not Working
Preheating Dies	60	Not Working
Dismounting Dies from Cassettes	21.5	Working
TOTAL:	**271**	-

In 1000 ton press of Aksan Steel Forging Company, it is not possible to prepare, mount and align the die set of next production while the press is busy with the previous production. The only operation that can be performed when the press is working is the mounting of dies to cassettes. The alignment of lower and upper dies is performed on the press when the press is stopped completely.

1.5 Time Losses and Encountered Problems During Die Changes

During the die changing operations, the forging machines are kept idle. The time spent for mounting and dismounting of die sets into the forging press is considered as unproductive time, since the forging presses are not working during these operations.

The alignment of upper and lower dies relative to one another in vertical axis is carried out in very long time. This process is accomplished in difficulty and requires great experience. After the trial tests, it is generally necessary to disassemble the whole die set from the press and mount them again.

In Aksan Steel Forging Company, during the die changing operations of the press with 1000 ton capacity, the following time wastes and problems are encountered frequently [8]:

1) In some cases, upper and lower dies may be misaligned in horizontal axes, X and Y. Thus, the forged parts may be produced in such a shape that the upper half of the produced item is slipped on the lower half.

2) Sometimes, it is also encountered in the cylindrical dies that the upper and lower dies are misaligned relative to one another about the vertical axis.

3) During die changing operations, a particular time is also spent during mounting and dismounting the dies to/from the cassettes.

4) There are some referencing problems in CNC and EDM machines during revision when the dies are worn out and require remachining.

5) Difficulties in obtaining the additional material to put under the dies and elevate them to previous level after dies are returned from revision.

6) Difficulties in obtaining the additional material when the cassettes are mounted to the die holders. These additional plates are inserted between the shoes and the cassettes in order to ensure the tight mounting.

7) Operator may make a mistake and mount the upper die to the lower cassette or vice versa.

8) Operator may not differentiate the orientation of the cassettes and make a mistake during mounting.

9) Some misalignment problems are encountered frequently since the cassettes are not positioned on the press properly.

10) Before the revision, the operator may not understand if this die is reached to its revision limit or not. Additionally, the operator may not understand how many times a die can be sent to revision.

Detailed information about these problems and proposed solutions for each problem will be explained in Chapter 3.

In order to annihilate those problems, the considerable amount of raw material, energy, task force and especially time are now being wasted in the supporter company, Aksan Steel Forging Company.

1.6 Previous Studies on Quick Die Change

Various process development studies about forging process have been conducted in METU-BILTIR Center [3, 9 - 16]. Those studies include design and thermo-mechanical analysis of warm forging process and dies, design and implementation of hot precision forging die for a spur gear, the design and analysis of preform in hot forging for non-axisymmetric press forgings, the analysis and preform design for long press forgings with non-planar parting surfaces, the analysis of wear in forging dies, the hot upset forging dies etc. Gökler developed a computer program for the design of the operational sequences and the dies for horizontal forging machines [17].

The increased competition in forging industry develops a necessity of die changing time to keep at a minimum level.

There are several studies also being made about quick die fixturing and setup systems [18, 19]. The aims of those studies are minimizing testing, providing flexibility, maintaining high productivity and accelerate delivery. Furthermore, those studies propose standardizing the dies, converting internal die changing operations (operations when press is stopped) to external die changing operations (operations when press is working), standardizing internal die change operations, revision of auxiliary equipment used during die changes and improvement of lubrication and heating methods.

In the frame of worldwide competition of companies, one of the methods proposed by Lean Production System [20, 21] is the Single Minute Exchange of Dies (SMED) System. SMED System was developed by Shigeo Shingo and performed

successfully in Toyota Automobile Factory located in Japan. It is a theory and set of techniques that make it possible to perform equipment setup and changeover operations under 10 minutes - in other words single digit range. This method spread worldwide after the successful application in Japan [22, 23].

In the Toyota Automotive Factory, in Japan, the setup time of the forging press with capacity of 1000 tones was 4 hours before the application of SMED System. After application of modifications and improvement techniques of SMED System, this setup time was reduced to 3 minutes. The saving of this application is 98.7 % (80 times) [22]. Detailed information about the SMED system will be given in Chapter 2.

The great deal of the knowledge about fixturing is obtained by experience in industrial applications. Modular fixturing and automated fixtures also triggered new approaches [24, 25]. Besides, Computer Integrated Manufacturing (CIM) and Flexible Manufacturing Systems (FMS) induce newly developed techniques used for fixturing.

A quick fixturing system for forging dies has never been researched at METU and it will be the first project to be done in METU-BILTIR Center Forging Laboratory.

1.7 Scope of Thesis

Die setup is one of the important steps in hot steel forging process that affects product cost directly. As discussed above, die setup starts with unloading the previous die set and ends with approval of the first part produced for particular forging lot. During die setup process forging machine is kept idle.

In forging industry, increasing competition leads companies to keep the time spent for die changing operations at minimum level. In Aksan Steel Forging Company, die changing operations generally take about 3.5 hours on average. The main aim of this study is to reduce changeover time of the press with 1000 ton capacity of Aksan Steel Forging Company as much as possible.

There are plenty of advantages that a company would benefit with a quicker die exchange system. A quick die change will result in more frequent die changes and this definitely leads reduced batch sizes of the products, increased capacity, increased flexibility, reduced lead time and reduced wastes.

After die sets are fixed to the ram and anvil of the press, adjusting and testing operations also take about the same time spent for fastening the dies in Aksan Steel Forging Company. By reducing the adjustment time, the lot size of production can be reduced, product range of the company can be broaden, moreover since the productive time of the press increases, the cost per product shall also be reduced.

This study is one of the pioneer industries – university collaboration study which has been supported by The Scientific and Technological Research Council of Turkey (TÜBİTAK). With the thesis for industry logic, this is a SAN-TEZ thesis and Aksan Steel Forging Company is the industrial supporter of the study.

Scope of this study is to develop a modular die setup (or fixturing) system which minimizes idle time of the forging press and increases productivity. The dies and the other elements used in forging applications will be redesigned with a systematic approach and the modular die sets will be built. It will be tried to minimize the problems encountered in Aksan Steel Forging Company during the die changing operations.

Applicability of Single Minute Exchange of Dies (SMED) System to forging press will be studied. Basic principles of SMED System and quick die change methods will be given in Chapter 2. Current problems and time wastes encountered during die changing in Aksan Steel Forging Company and the proposed solutions to these problems will be described in Chapter 3. The modules which are the elements of the proposed modular die set and assembly of these modules will be described in Chapter 4, in detail. During the design of the proposed model, ProEngineeer CAD software is used for 3-D modeling. The application of the system in Aksan Steel Forging Company and the determination of dimensions of the new dies and the new cassettes for the die holders of 1000 ton Stankoimport press of the company will be explained in Chapter 5. The

productions of the modules of the proposed system will be presented in Chapter 6. Chapter 6 will also include the time study in 1000 ton forging press of the company. Finally discussion, conclusion and suggestions for future work will be given in Chapter 7.

CHAPTER 2

QUICK DIE CHANGING METHODS

2.1 Quick Die Changing

In recent years, the need for short setup has been bigger than ever in all areas of industry. Products customization, market globalization and increasing effort for better efficiency are the basic concepts of substantial focus on setup times.

Rapid changeover has been described as a fundamental component of modern manufacturing [26-29].

The time between producing the last product of a production group and obtaining the first product of a new production group meeting all quality requirements, is known as changeover time and generally considered as non-productive waste or 'added cost'. Especially, for a forging machine every minute lost is considered as waste. Setup times, need to be reduced in order to increase the available capacity for production. The main demand of a quicker die change comes from the need to be lean and eliminating wastes. The wastes defined by lean production are comprised of 9 items which are wastes of overproduction, processing, motion, transportation, inventory, waiting, defects and people skills [30].

There are a lot of benefits that a quick die change basically provides [18]:

a) Increased Capacity: Setup time reduction is the most cost effective mean to increase the capacity of a plant. The cost of setup reduction is much lower, compared to cost of additional press and increased floor space.

b) Scrap Reduction: Quick die change also provides the repeatability of setup and ensures the first hit produces good part. Unavoidable test productions are usually performed after the trial-and-error adjustments in traditional setup. Thus, elimination of adjustment will eliminate the test productions and scraps.

c) Safety*:* Superior clamping methods and secure die handling methods are also provided by quick die change. The improved clamping methods can be safer and stronger. Moreover, mounting and dismounting are much easier with functional clamps. The possibility of operator faults can be reduced.

d) Improved Quality: Standardized die setup and elimination of trial runs guarantee lower defects and repeatability of the forging process. The quality of the products including the first product is automatically improved.

e) Reduced Inventory: The increased productivity, increased setup confidence and reduced setup costs make short production runs possible. Just in Time (JIT) [20,21] can be attainable by reduction in inventory.

f) Lower Cost: The efficient utilization of equipment definitely affects the direct production costs since it has an influence on overall machine performance. An overview of financial benefits of short setup times can be found in the literature [31].

g) Better Flexibility: In order to offer a variety of products to the customer, decrease in the quantities of the production and cope with small lot sizes, a company should have short setup times. Short setup is the only way for flexibility to compete in the industry without the expense of excess inventory.

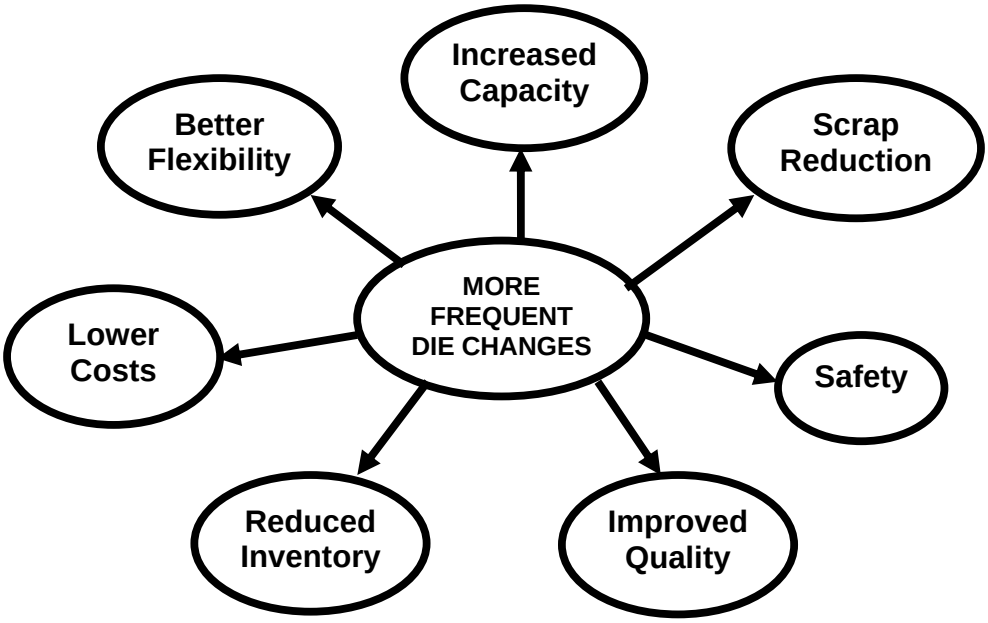

Figure 2.1 Benefits of Quick Die Change

Benefits of quick die change are also pointed out in Figure 2.1. Besides, better operator utilization, quicker delivery and shorter lead times are additional outcomes of frequent die changes.

2.2 Single Minute Exchange of Dies (SMED) System

In 1950, Shigeo Shingo conducted a production efficiency improvement study, at Toyo Kogyo's Mazda plant in Hiroshima, Japan [32]. He improved the process at Mitsubishi and Toyota in the 1950's and 1960's, so the concept of Single Minute Exchange of Die (SMED) System emerged. The theory and techniques were called Single Minute Exchange of Die because the setup operations are aimed to be performed within ten minutes - in other words in a time interval of single digit range. This is the goal of the system, although not every setup is fully completed in ten minutes. However,

reduction is still possible for every setup. The reduction in die changing time is as much as 80-90 % by SMED in most of the cases. Less than 50% reduction is rarely realized. In one of the first applications of the SMED approach, Toyota reduced die changing time of a 1000 ton stamping press from 4 hours to 3 minutes [23]. The improvement is 98.7 %, or a factor of 80.

Reduced inventories, improved productivity, higher quality, increased safety, improved flexibility, lower costs and improved operator capabilities during setup are some of the advantages of SMED System. SMED helps the companies to meet the customer needs by making cost effective productions in smaller quantities with less waste.

According to SMED, setup operations can be divided into two categories:

- Internal Setup: Operations that must be performed when the machine is stopped. Examples are removing dies, die holders and cassettes, adjustments, positioning & aligning dies etc.

- External Setup: Operations that must be performed while the machine is operating and production is going on. Examples of external setup operations are transportation of tools, setup equipment and aids from storage locations to the machine, making repairs, after process adjustments of the dies, checking availability of correct materials, preset of dies and tools, etc.

As previously described, the changeover time is the total time between the last good productions of the previous run, to the first good production of the succeeding run, at full line efficiency. Therefore, only the internal setup operations are considered as changeover. Changeover, internal setup and external setup can be seen schematically in Figure 2.2.

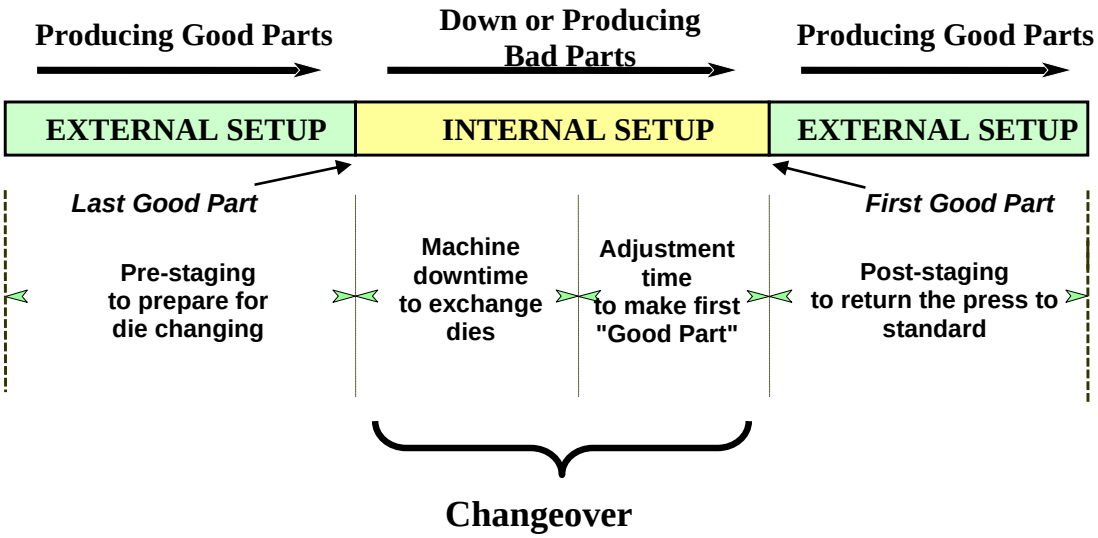

Figure 2.2 Internal and External Setups

As illustrated in Figure 2.3[23], there are three stages in SMED approach to improve die changing operations.

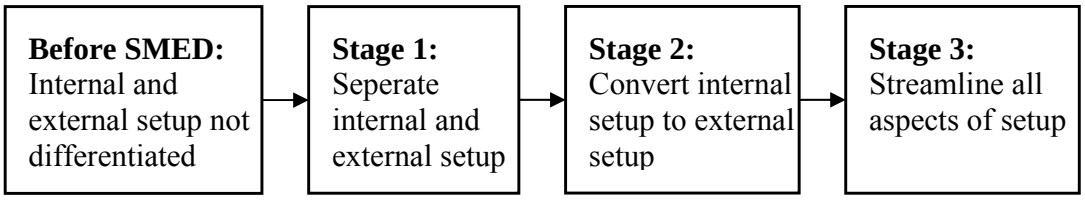

Figure 2.3 Three Stages of SMED Implementation [23]

2.2.1 Stage 1: Separating Internal and External Setup:

Identifying the internal and external setup operations is the most important step in implementing SMED. In this stage, the tasks that can be performed while the machine is running are distinguished from the tasks that can be carried out when the machine is stopped. Some certain tasks like repairs, taking the necessary tools closer and preparation of dies and tools can be carried out before the machines are stopped. At this stage alone, converting these tasks to external setup can reduce changeover time as much as 30 to 50 %.

According to SMED, three practical techniques are used to separate internal and external setup tasks. These are [22, 23]:

- Checklists: They are lists of all things required for setup; Checklists can include essential tools, specifications, operating conditions, required workers etc.

- Function Checks: They give information about the parts whether they are in perfect working condition. Repairs of dies and other tools should be performed before the internal setup. Otherwise, delays will occur in internal setup.

- Improved Transportation of Dies and Tools: All dies, shoes and required tools should be transported to the machine before the machine is stopped for changeover. Similarly, old dies and unnecessary tools should be put away, after the machine is started for the new production.

2.2.2 Stage 2: Converting Internal Setup to External Setup:

When converting internal activities to external ones, the following two items should be considered. First one is reexamining the operations and checking the true functions of each operation to find out if this operation is mistakenly or unconsciously set in internal setup. Second one is trying to find ways to convert these internal setup operations to external ones.

Following three practical techniques are used to convert internal setup steps to external setup steps [22, 23].

- Advance Preparation of Operating Conditions: It ensures that all necessary parts, tools, and environmental conditions are ready before the internal setup operations begin. Conditions like temperature, pressure and material positions can be prepared externally when the machine is working.

- Function Standardization: Standardization means keeping something the same from one operation to another. When tools or machine parts are different from those in the previous one, operators have to perform time consuming adjustments during changeovers. Standardization can be applied to dimensioning, centering, securing etc.

- Intermediatery Jigs: They are the frames or plates that have standard dimensions. Generally two identical jig plates are prepared and used. While the die is fastened to one of these jigs and used on the machine, the next die is centered and attached to another jig as an external setup procedure. When the operation with the first die is finished, the jig which it is attached is removed from the press and the second jig with the next die is mounted to the press.

2.2.3 Stage 3: Streamlining All Aspects of Setup:

In this stage, the function and purpose of each operation are examined one more time and the basic elements of setup are analyzed in detail. Streamlining all internal and external setup operations means improving those processes. Especially, specific time shortening methods are applied to internal setup operations, when machine is not working.

The practical techniques for streamlining applications can be classified in two categories. Those are streamlining external setup and streamlining internal setup.

- Streamlining External Setup: Organizing the tools, dies, jigs and gauges required for die setup, maintaining the methods to keep those items in perfect conditions,

and quantity of those items to be stored are some of the matters that can be considered carefully and developed during external setup. Simplifying the storage, improving the transportation of the tools and dies are some examples of this stage.

- Streamlining Internal Setup: This step is the key point of time reductions, because the reduction in changeover time strongly depends on shortening the time spent for internal setup operations. Implementing parallel operations, using functional clamps, eliminating adjustments and mechanization are the techniques used for improving internal setup operations. Implementing parallel operations, using functional clamps and eliminating adjustments will be explained in Sections 2.3, 2.5 and 2.6 respectively.

The comparison of the traditional setup operations which have been explained in Section 1.4 and SMED System is tabulated in Table 2.1.

Table 2.1 Comparison of Traditional Setup and SMED System

SETUP STEPS	Traditional Setup		SMED	
	Internal	External	Internal	External
Preparation	x			x
Mounting & Dismounting	x		x	
Establish Control Settings	x			x
First Run Capability	x		**Not Applicable**	**Not Applicable**
Setup Improvement	x			x

Table 2.2[22] shows time reductions achieved in early years of SMED until the year 1975. In recent years, the reductions have been even greater.

Table 2.2 Time Reductions Achieved by Using SMED [22]

Company	Machine	Before Improvement	After Improvement	Reduction
M Electric	150 ton single shot press	1 hour 40 mins	4 mins 36 sec	94%
S Industries (Progressive Dies)	150 ton single shot press	3 hours 10 mins	8 mins 25 sec	95%
T Manufacturing (Dies for spring)	80 ton single shot press	4 hours 0 mins	4 mins 18 sec	98%
K Industries	100 ton single shot press	1 hour 30 mins	3 mins 20 sec	96%
S Metals	100 ton single shot press	40 mins	2 mins 26 sec	94%
H Press	30 ton single shot press	50 mins	48 sec	98%
S Manufacturing	250 ton Die-cast Molding Machine	1 hour 10 mins	5 mins 36 sec	92%
T Die Casting	250 ton Die-cast Molding Machine	1 hour 20 mins	7 mins 46 sec	90%

2.3 Quick Die Locating Methods

If quick die changing and setup repeatability are aimed to be performed, a repeatable die locating method is essential. It should not depend upon complicated measuring or trial and error methods. Following methods are some of the popular die locating techniques [18].

2.3.1 V Locators and Flat Pocket:

This method suggests to machine a V shaped slot and a flat pocket on the dies. Die locating is achieved by utilizing of two pins which are spaced on fixed locations on the die holder of the press. First of all, one of the pins is engaged in the flat pocket of the die and afterwards exact locating is performed by engaging the second pin into the V slot. Figure 2.4 illustrates this application. In order to accommodate different die widths in the same press, several pairs of the pin holes may be machined on the die holders. So, according to the width of the die, the pins can be moved to desired pair holes on the die holder.

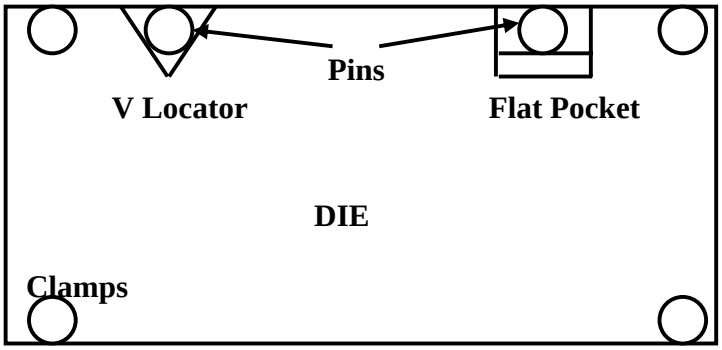

Figure 2.4 V Locators and Flat Pocket Method

2.3.2 Pin Locators:

Pin locators are another very common application of locating dies. In this method, bottom surface of the die has one round and one slotted hole. As in the case of V locators and flat pocket method, at least two pins are utilized again in this method. When the first pin is engaged in the slotted hole of the die, the exact locating is obtained by locating the second pin into the round hole of the die. Pin locators method is illustrated in Figure 2.5 schematically.

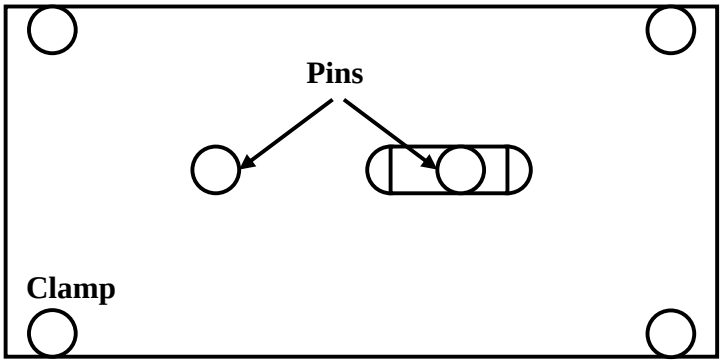

Figure 2.5 Pin Locators Method

2.3.3 Locating Dies Front-to-Back:

Figure 2.6 illustrates a system of locating a die front-to-back by means of a keyway milled in the die holder. A wider keyway is milled in the bottom surface of the die, to permit easy engagement of the key.

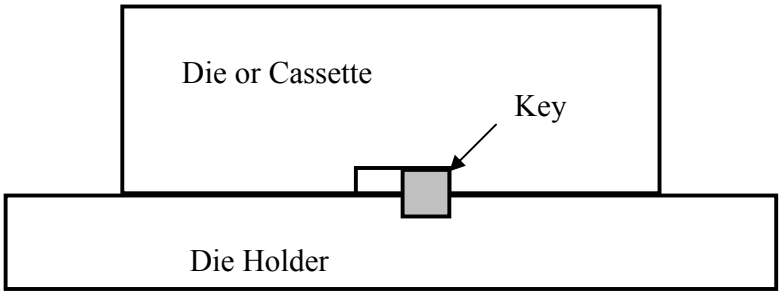

Figure 2.6 Locating Dies Front-to-Back Method

2.4 Use of Functional Clamps

In traditional setup, several bolts are commonly used to attach dies to cassettes and cassettes to press. A bolt is passed through a hole in the die or shoe and attached to place where it is wanted. But using bolt and nuts as fasteners slows down internal setup in great deal. For example, if the nut has fifteen threads on it, there is no way to fasten it unless it is turned fifteen times. Actually, it is the last turn that fastens and the first turn that loosens the bolt. So, remaining fourteen turns are waste of time and energy.

To avoid those kinds of wastes, functional clamps are used widely in industry. Functional clamps are the devices that hold objects in place with minimal effort. They are modified bolts or completely different types of fasteners that can be tightened or loosened quickly. Some examples of one turn functional clamps are explained in detail as follows [22, 23];

2.4.1 Pear Shaped Hole Method:

In pear shaped hole method, in order to eliminate successive turning process of the bolts, bolt holes are made into pear shaped holes, as Figure 2.7[23] illustrates. Once bolt's head or nut is loosened in one turn, the part is moved by one bolt's width. Then without removing the bolts or nuts, the part can be lifted off over the bolts and taken.

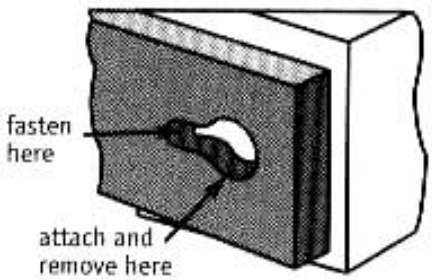

Figure 2.7 Pear Shaped Hole Method [23]

2.4.2 U Shaped Washer Method:

As can be seen in Figure 2.8[22], a part having a large hole can easily be mounted to a surface by utilization of a washer when a U shaped slot is cut on the washer. After the bolts are loosened with only one turn, U shaped washer is taken out and the holed shoes or dies are separated easily from the place where they are fastened. It is no longer necessary to pull out the bolts and nuts, so the process of searching bolts and nuts is also eliminated.

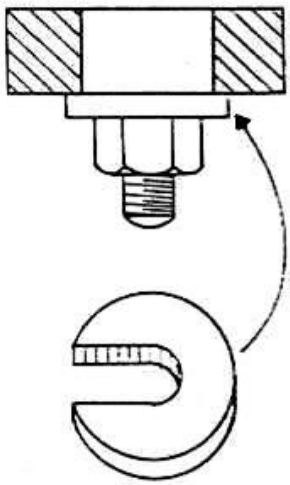

Figure 2.8 U Shaped Washer Method [22]

2.4.3 Split Thread Method:

As functional clamps, split thread bolts and screws are also used. The schematic illustration is given in Figure 2.9[33]. The application of this method is explained in following steps:

i. Grooves are cut along the length of the bolts to split it into three sections.

ii. Corresponding grooves are cut also in the threads of female screw.

iii. During the connection process, insertion is performed by aligning the ridges of the bolt (where threads remain) with the grooves inside the female screw (where the threads have been cut).

iv. Then, tightening is accomplished by slipping the bolt by one-third turn and putting the threads of bolt all the way into position.

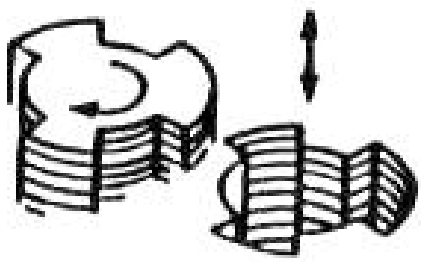

Figure 2.9 Split Thread Method [33]

In this method, the area of effective friction is preserved by increasing the length of female screw. Since the purpose of the bolt is simply to fasten and unfasten, releasing and fastening actually happens with one-third rotation. So the only thing to determine is the length of the screw.

2.4.4 U Slot Method:

U slot method is often used to improve setups where traditional clamping with bolts has been used previously. In this method, a U shaped slot is cut in the attachment edge of the die. After inserting the head of the bolt into a dovetail groove of the press table and sliding the bolt into the U slot of the die, it is possible to fasten the die with one turn of the nut. The method is represented schematically in Figure 2.10[23].

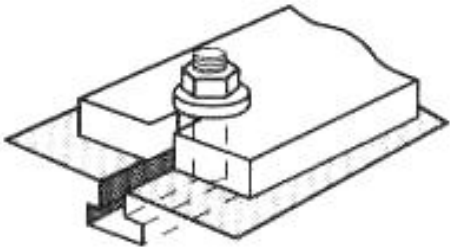

Figure 2.10 U Slot Method [23]

2.4.5 Clamp Method:

Clamp method is another widely used alternative of one turn functional clamps. In this method, securing is performed by a clamp pressing down on the die. Tightening is performed by bolts. Figure 2.11[22] illustrates the clamping technique.

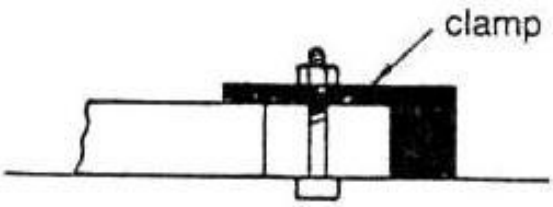

Figure 2.11 Clamp Method [22]

Clamp method and U slot method are useful only if the items to be mounted, are of uniform thickness. If thickness varies, standardizing the parts should be considered.

2.4.6 Other Examples of Clamping Dies:

When developing fastening techniques, the key element lies in recognizing the role of engaged threads. Their function is to maintain friction corresponding to the clamping pressure.

Figure 2.12[18] illustrates four examples of commonly used die securing methods. Those examples include number of spaces blocks, one piece clamp, constant height clamping ledges and forged steel clamps.

Regarding the process applications, shop rules, loading conditions and equipment attainability, not all of these methods may be suitable for a given application.

Bad examples of securing can sometimes be encountered in industry. However most of the companies are trying to forbid these practices by insurance inspectors and their company rules.

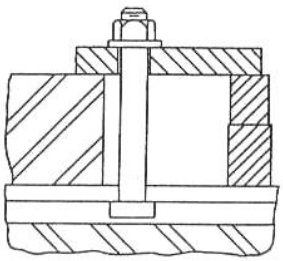

(a) Number of Spacer Blocks

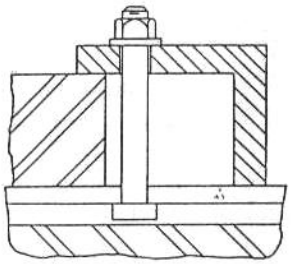

(b) One Piece Clamp

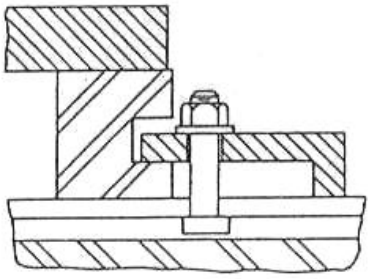

(c) Constant Height Clamping Ledge

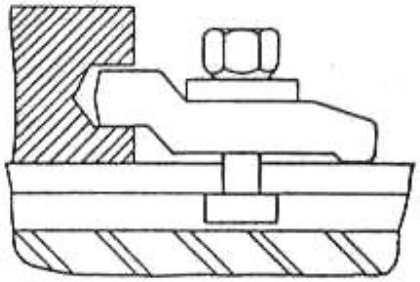

(d) Forged Steel Clamps

Figure 2.12 Examples of Die Clamping Methods [18]

Figure 2.13[18] illustrates four examples of those bad die clamping methods. The examples include strap installed backwards, hole in clamp too large, nuts and extra washers to permit a long bolt usage and improper spacer blocks. None of these examples should be permitted in any industrial application.

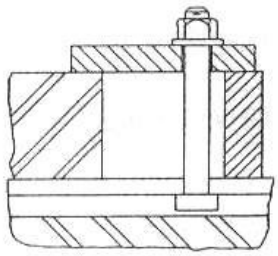

(a) Strap Installed Backwards

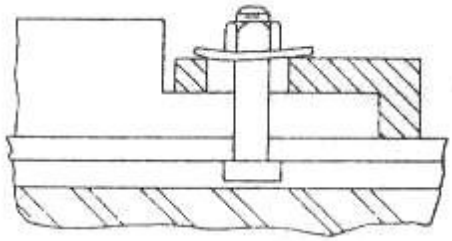

(b) Hole in Clamp Too Large

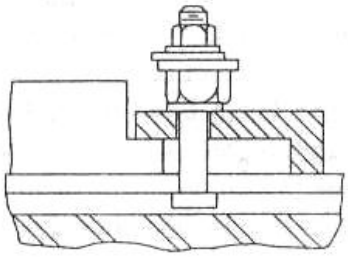

(c) Nuts and Extra Washers to Permit a Long Bolt Usage

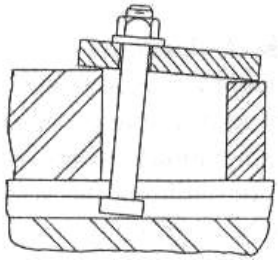

(d) Improper Spacer Blocks

Figure 2.13 Examples of Improper Die Clamping Methods [18]

2.5 Elimination of Adjustment

Test runs and adjustments normally take 50 % of traditional setup time. If these test runs and adjustments are eliminated or reduced, a tremendous amount of machine downtime can be saved. The number of test runs and adjustments depends on how accurately an operator performs the centering, dimensioning and condition setting in the internal setup procedure. Therefore, in order to eliminate adjustments, internal setup operations should be standardized and refined.

There are practical techniques for elimination of adjustment [22,23]. Some of these are:

- Fixed Numerical Settings
- Imaginary Center Lines and Reference Planes

2.5.1 Fixed Numerical Settings:

For eliminating adjustments an operator should rely less on intuition and more on constant numerical values for machine settings. Although intuitive judgment may have some sort of statistical validity, they remain inexact and they do not have the same precision as constant value settings. The main rule is that, if settings are made on the basis of intuition and experience, there is no way to avoid test runs.

In measurements, the use of graduated scales will lead to significant improvements in elimination of adjustments. When better accuracy is needed, measuring devices equipped with dial gauges can be used. In recent years, digital numerical control devices are also improved. In dimensioning and centering, gauges and shims -spacer blocks with fixed numerical dimensions- can be used for extremely rapid settings.

2.5.2 Imaginary Center Lines and Reference Planes:

Invisible center lines and reference planes means that the correct position for tool or workpiece is found by intuition or by trial and error. Making these center lines and reference planes visible is an effective strategy for eliminating later adjustments.

2.6 5S System

5S is a system to reduce waste and optimize productivity through maintaining an orderly workplace and using visual clues to achieve more consistent operational results. Implementation of this method "cleans up" and organizes the workplace basically in its existing configuration [34]. The 5S method is a structured system to implement workplace organization and standardization.

The 5S system has been developed in Japan at Toyota. It is called 5S, since all steps start with an "S": Seiri, Seiton, Seiso, Seiketsu, Shitsuke. Also in English the method can be referred to as 5S [35,36]:

Sorting refers to the practice of sorting through all the tools, materials, etc., in the work area and keeping only essential items. Everything else is stored or discarded. This leads to fewer hazards and less clutter to interfere with productive work.

Setting in Order focuses on the need for an orderly workplace. Tools, equipment, and materials must be systematically arranged for the easiest and most efficient access. There must be a place for everything, and everything must be in its place.

Shining indicates the need to keep the workplace clean as well as neat. It deals with cleaning and inspecting to keep tools and machines in good condition. After each operation, the work area is cleaned up and everything is restored to its place.

Standardizing allows for control and consistency. Visual management is an important aspect to facilitate easy understanding of these standards. Basic standards apply everywhere in the facility. Everyone knows exactly what his or her responsibilities are. House keeping duties are part of regular work routines.

Sustaining is the continuous process of improvement and further refinement of the standards and the communication with all employees.

The 5S provide a methodology for organizing, cleaning, developing, and sustaining a productive work environment. In the daily work of a company, routines that

maintain organization and orderliness are essential to a smooth and efficient flow of activities. This lean method encourages workers to improve their working conditions and helps them to learn to reduce waste, unplanned downtime, and in-process inventory [34].

Figure 2.14 5S System [34]

CHAPTER 3

ENCOUNTERED PROBLEMS DURING DIE CHANGES AND PROPOSED SOLUTIONS

3.1 Current Problems Encountered in Aksan Steel Forging Company

Several problems and time wasting operations are frequently encountered in Aksan Steel Forging Company during die changing operations on the forging press with 1000 ton capacity. For the purpose of shortening die changing time of this particular press and removing time wasting activities, a new system with modular die sets has been developed.

The main objective of this section is to analyze the current problems during die changing operations in Aksan Steel Forging Company one by one, and try to find solutions for each problem as much as possible. For this reason, first of all, these problems will be determined properly, afterwards proper solutions for those problems will be tried to find out. The problems of current die changing operations in Aksan Steel Forging Company can be listed as follows [8].

Problem 1 The upper and lower dies may be misaligned in horizontal axes, namely X and Y axes. So the forged part could be produced in such a shape that upper half of the produced item is slipped on lower half.

Problem 2 Considering the cylindrical dies, the upper and lower dies may be misaligned relative to one another about the vertical axis. In this case, one of the dies can be positioned few angles tilted relative to the other.

Problem 3 Time consuming operations during mounting and dismounting dies to/from the cassettes is another problem. (For example: During mounting and dismounting operations of the dies, some fastening tools like bolts and the shoes are used. It is required to turn each bolt again and again to fasten the dies to the cassettes by shoes.)

Problem 4 Referencing problems in CNC lathes, CNC milling machines and EDM machines when the dies are worn out and it is required to remachine the same profile (i.e. revision).

Problem 5 Difficulties in obtaining the additional plate to put under the dies after dies are returned from the revision. During remounting of revised dies, the dies should be raised to previous levels by insertion of some additional plates having the same thickness with the depth of removed material.

Problem 6 When the cassettes are mounted to the die holders, additional plates are inserted between the shoes and the cassettes in order to ensure the tight mounting.

Problem 7 Operators may make mistake and mount the upper die to lower cassette or vice versa.

Problem 8 Operators may also make mistake during mounting of the cassettes. They may not differentiate the orientation of the cassettes.

Problem 9 Since the cassettes are not positioned on the press properly and due to the lack of such a system that prevents operators' faults, some misalignment problems are encountered frequently.

Problem 10 When a die is decided to be sent to the revision, the operator may not understand if this die is reached to its revision limit or not, by just looking to the die. In other words, the operator can not understand how many times a die can be sent to revision.

The problems mentioned in this section are the problems that are came across during the mounting and dismounting of the dies and cassettes from the press with 1000 ton capacity of Aksan Steel Forging Company. Avoiding of these problems causes the die changing and alignment time of the forging press to reduce, thus, the productive time of the press increases substantially.

3.2 Proposed Solutions for the Encountered Problems

The particular problems mentioned in Section 3.1 will be analyzed in detail in this section. Solution ways to overcome those problems are tried to be found out regarding feasibility, producibility, applicability and practicability criterias. Following items include the proposed solutions for each problem encountered during die changing operations in Aksan Steel Forging Company.

Problem 1: It is frequently seen that the upper and lower dies may be misaligned in horizontal position (They are not aligned in X and Y axes). The 1000 ton forging press and axes directions are shown in Figure 3.1. The upper and lower halves of the forged part may not coincide exactly and a slip may be seen on the produced part during the test productions in Aksan Steel Forging Company as in the case of Figure 3.2.

Solution 1: This problem can be eliminated by providing the corner shaped positioning features as seen in Figure 3.3 on the surfaces of the upper and lower dies. These shapes enable dies to match one within the other in exact position without slipping. The male profile should be machined on the upper die surface and the female profile should be machined on the lower die surface. When the dies are closed, those features restrict the dies to slip on X and Y axes, so the slipping problems on the forging can be eliminated. This method is an application of Imaginary Center Lines and Reference Planes method, which is explained in Section 2.5.2.

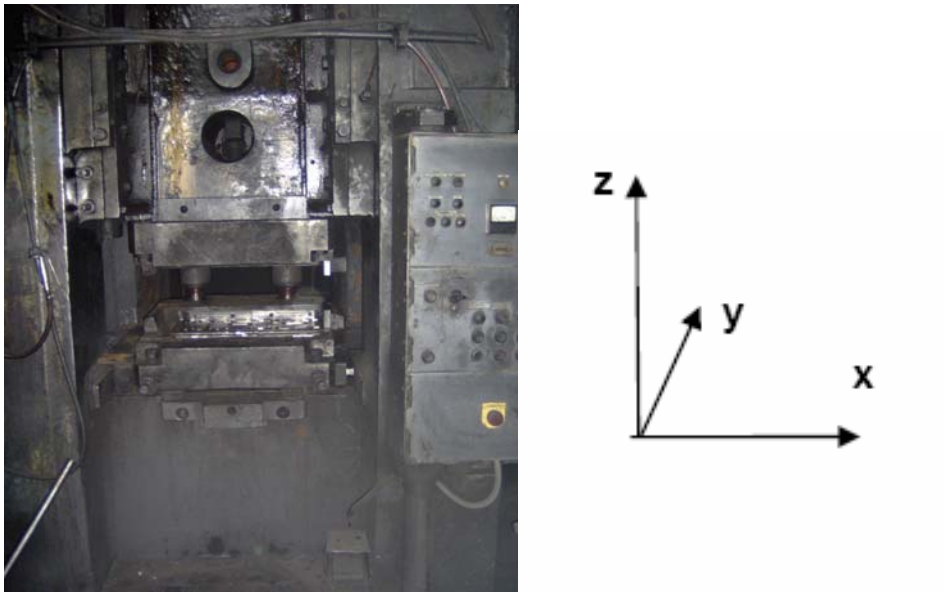

Figure 3.1 Forging Press and Axes Directions

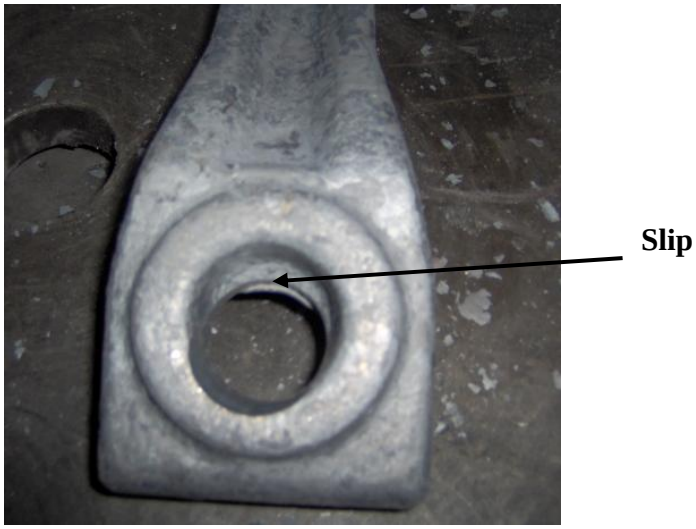

Figure 3.2 Slip Seen on the Test Productions

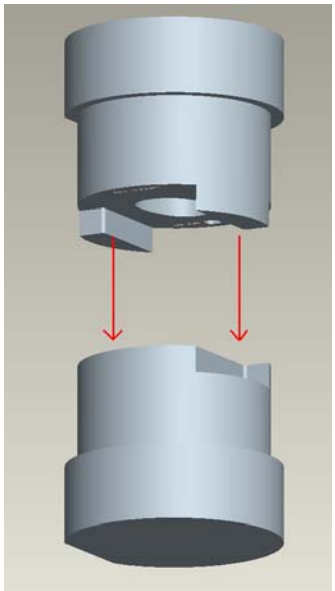

(a) When Dies are Open

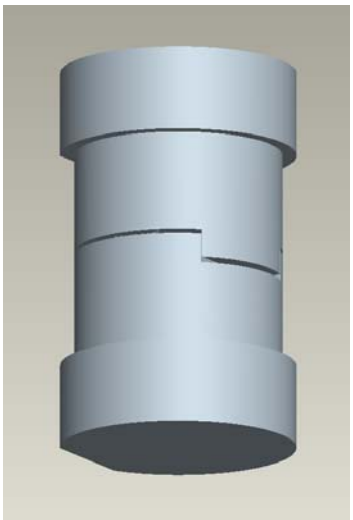

(b) When Dies are Closed

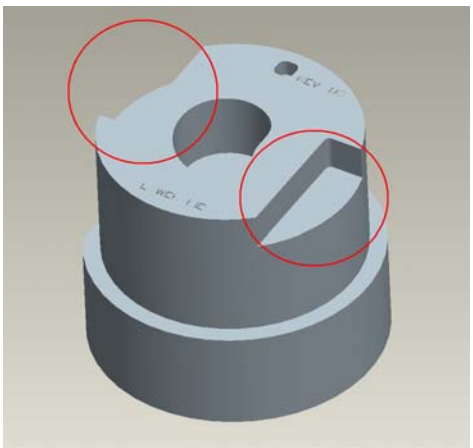

(c) Positioning Features on Lower Dies

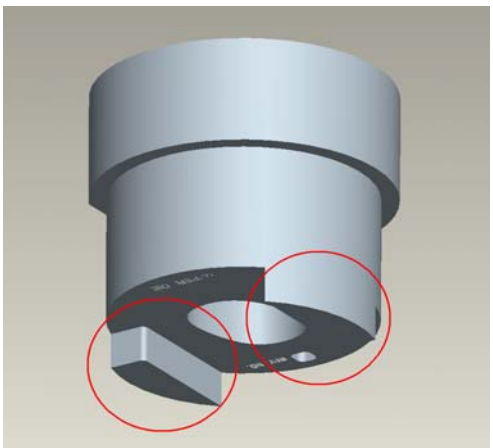

(d) Positioning Features on Upper Dies

Figure 3.3 Views of Positioning Features

Problem 2: Upper and lower dies may be misaligned relative to one another about vertical axis (Z axis). This problem is usually seen in cylindrical dies. In this problem, one of the dies is generally positioned few angles beyond the other.

Solution 2: With the help of positioning features shown in Figure 3.3, the upper and lower dies are also restricted in rotational movement relative to one another. The problem of slipping caused by rotational misalignment disappears by machining male features on the upper die surfaces and female of the same features on the lower die surfaces.

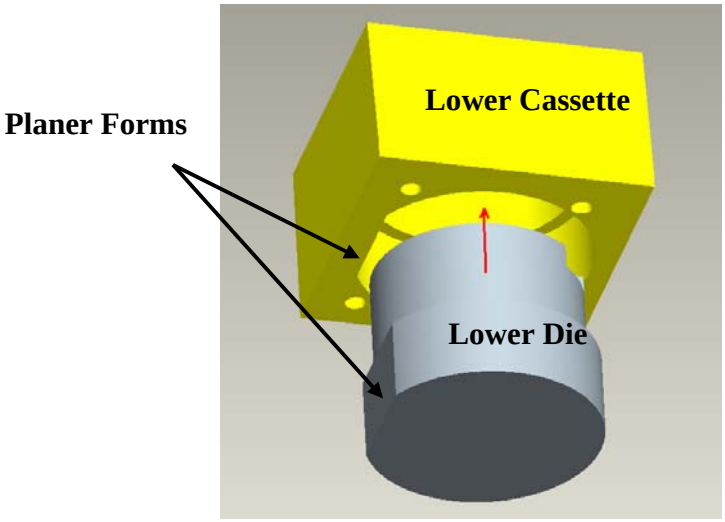

Figure 3.4 Restricting Rotational Movement of Dies

Moreover, planer forms are decided to be machined on dies. Some parts of the holes of cassettes, which the dies will be located into, are also machined planer accordingly as seen in Figure 3.4. These planer forms are machined on the dies and cassettes of both of the upper and lower sides. When the dies are placed into cassettes, the angular positions of the dies are fixed by these planer forms (i.e. Imaginary Center

Lines and Reference Planes method, which is explained in Section 2.5.2). Figure 3.4 represents the application for the lower die sets.

Problem 3: During mounting and dismounting operations of dies, there are some fastening operations which consume a lot of time. In Aksan Steel Forging Company, dies are placed into the cassettes and fastened by some fastening tools like bolts and shoes. During these mounting operations, each bolt is turned again and again to fasten the dies to the cassettes by the shoes. One of the cassettes which are currently used in Aksan Steel Forging Company is shown in Figure 3.5.

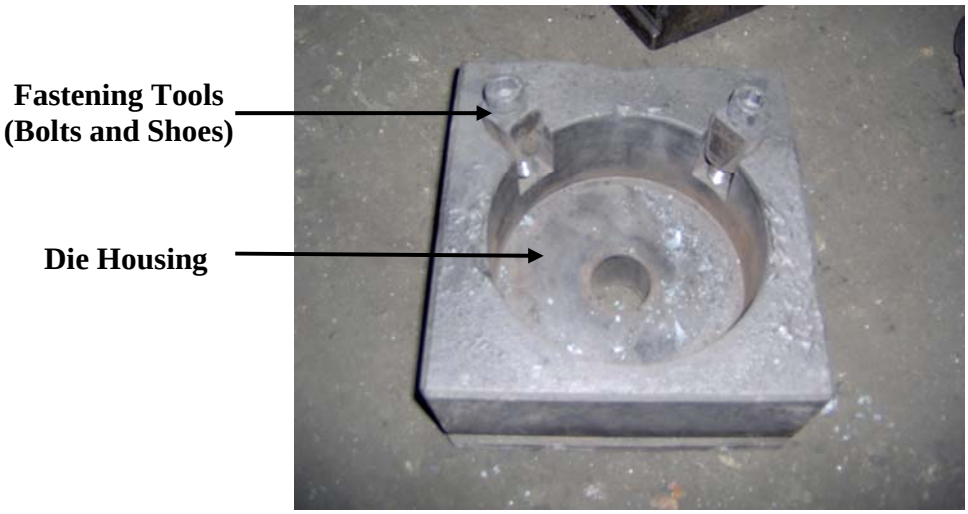

Figure 3.5 The Cassette Currently Used in Aksan Steel Forging Company

Solution 3: Instead of using of the current cassettes in 1000 ton press of the company, it is proposed to use new cassettes which have through holes on them. In newly designed cassette system, the dies will be placed into the new cassettes from the lower surface of the cassettes as shown in Figure 3.6. Since the dies are seating on the inner steps in the cassettes, there is not a possibility that the dies come out of the cassettes from the upper surface of the cassettes. In the cassettes, the rotational movement of the dies is also restricted by the planer forms.

With this solution, fastening of the dies to the cassettes by shoes is eliminated (Streamlining External Setup Operations, which is explained in Section 2.2.3).

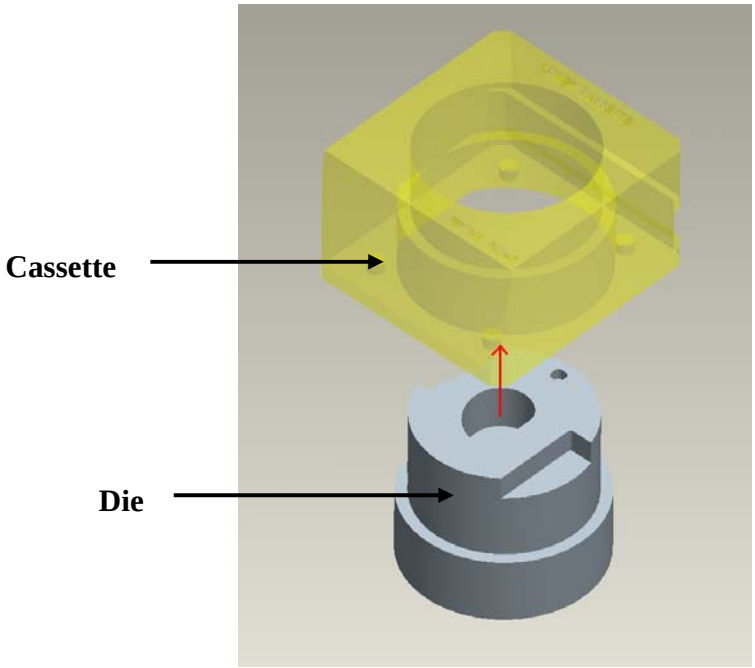

Figure 3.6 Placing Dies into New Cassettes

Problem 4: Wear problems begin to occur on each die surface, after a particular operation period. This worn surfaces cause to produce defective parts. For overcoming these problems, worn dies should be dismounted from the press and sent to revision in order to remachine the die cavity on the worn die surface. When a die is sent to the revision, the material with a certain depth of cut is removed from the die surface. So the same die cavity is manufactured 2-3 mm below the worn surface.

These revision operations are usually performed in CNC milling, CNC turning or EDM machines. When the same die cavity is required to be reproduced on the worn die surface, mounting dies to revision machines should be performed accurately and precisely. This means, the worn dies should be fixed exactly to CNC milling, CNC turning and EDM machines in the same position as the previous cut. Otherwise, the new die cavity may be produced in wrong location on the die surface.

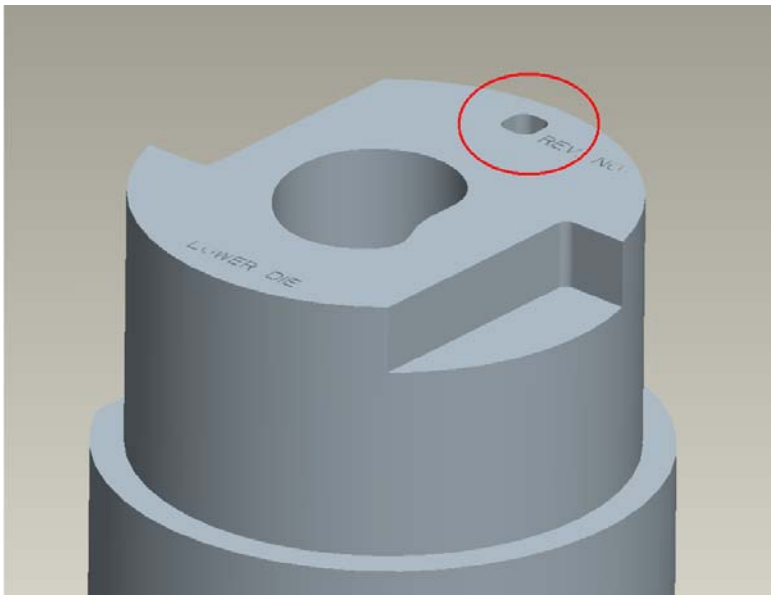

Figure 3.7 Square Reference Pockets

Solution 4: In order to overcome this problem, it is decided that there should be square-shaped reference pockets on specific locations of die surfaces as in Figure 3.7. These pockets will be used as the reference during remachining the same die cavities on the die surfaces with CNC turning, CNC milling and EDM machines. With this reference pockets, the same electrodes will be used in EDM machines and the same CNC codes can be used in CNC machines.

Problem 5: As described in Problem 4, a significant thickness of material is removed from the surface of the worn dies during the revision operations. Therefore, thicknesses of the revised dies become few millimeters shorter after the revision. When it is time to remount these revised dies to the cassettes, it is required to insert additional plates under the dies in order to eliminate this thickness difference and elevate the dies to the previous levels. Since the depth of cut of the material which is removed from the worn die surface is not standardized, the operators usually have difficulties to obtain the plate with required thickness. Consequently, a lot of time is spent during elevating the revised dies to the previous level.

Solution 5: When a die is sent to the revision, the removal of material from the worn die surface should be performed in a systematic way. In stead of removing only the sufficient thickness of material from the die surface to clear away the wear, the thickness of removed material can be determined in a more systematic way. For example multiples of 2 mm can be chosen as standard for removal thickness. Under this circumstance, the standard elevation plates with a multiple of 2 mm thickness should be kept ready in the forging factory. These standard plates would be inserted under the revised dies when it is time to fix the dies to the cassettes as in Figure 3.8 (For an instance, if the material with 4 mm thickness is removed from the worn die surface, 2 plates with 2 mm thickness would be sufficient to elevate the dies to the previous level.)

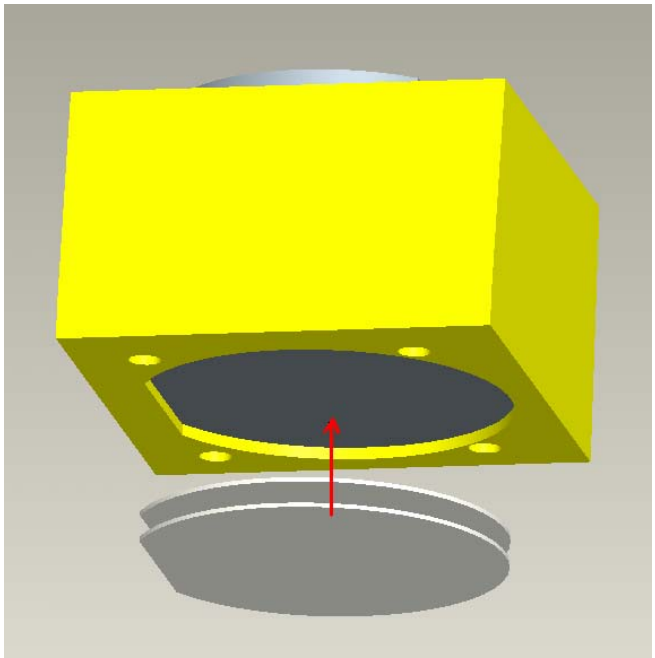

Figure 3.8 Standardized Elevation Plates

Figure 3.9 Die Fastening Plates

Problem 6: In Aksan Steel Forging Company, when the cassettes are mounted to the die holders, sometimes additional fastening plates are required to be inserted between the shoes and cassettes in order to ensure perfect fastening. In these cases, some difficulties may be experienced during finding the correct plates and fastening.

Solution 6: During the forging operations, the standard cassettes with certain external dimensions will be used. The mounting operations of these standard cassettes to the die holders will also be carried out by using the standardized fastening tools (i.e. standardized shoes). So there is no need for the fastening plates if the standardized cassettes and shoes are used (i.e. Function Standardization which is explained in Section 2.2.2). Thus, the need of using additional plates for fastening is eliminated. Further information about the standard die and cassette dimensions will be provided in Chapter 5.

Problem 7: An inexperienced operator may not differentiate which die is upper die and which die is the lower one. Therefore, during mounting dies to cassettes or die holders, he may fasten the upper die to the lower cassette or the lower die to the upper cassette by mistake.

Solution 7: In order to differentiate which die is the upper one and which die is the lower one, marking can be applied on the die surfaces. Figure 3.10 represents the marking of dies schematically. During production processes of dies or revision, all dies should be marked just after the dies are manufactured.

Problem 8: An operator may not differentiate the orientation of the cassettes during mounting. He may not understand which side of the cassette is the front side, which side is the back one, similarly which side is the right side and which side is the left one.

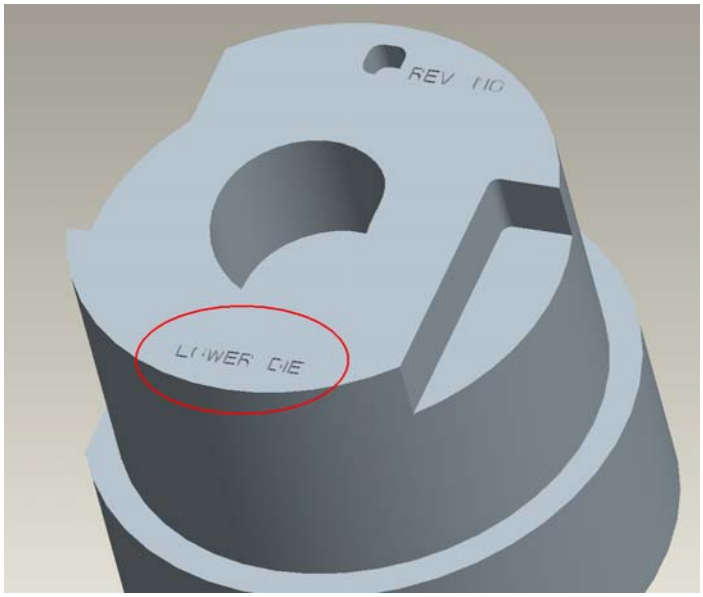

Figure 3.10 Marking on Dies

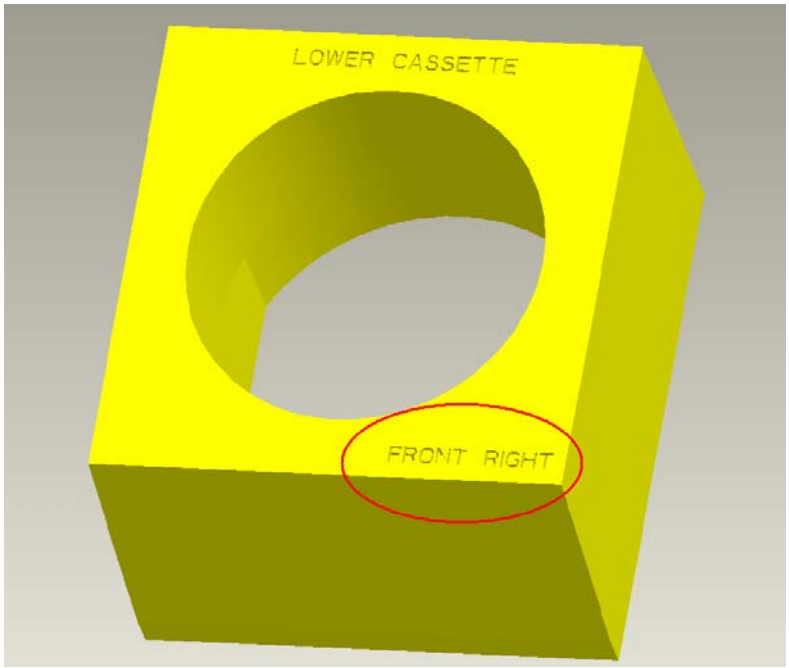

Figure 3.11 Marking on Cassettes

Solution 8: Cassettes should also be marked as shown in Figure 3.11. By marking, orientations of the cassettes are indicated on the upper surfaces of the cassettes. They indicate which side of the cassette is the front side, which side is the back one; and which side is the right side and which side is the left one. In order to prevent possible confusion during mounting dies to cassettes or cassettes to die holders, it is sufficient to mark one corner of cassette (For example marking front and right corner as "Front-Right"). These markings will correctly lead operators; hence, possible confusions will be avoided.

Problem 9: When mounting cassettes to die holders, the misalignment problems should be eliminated. The rule of thumb is that, the cassettes should be mounted in only one way and in such a method that there is not a possibility for operators to make a mistake (i.e. foolproof). Otherwise, misalignment problems may be seen in front-to-back or right-to-left directions of the press, causing faulty parts to be produced.

Solution 9: The top surfaces of the upper and lower die holders of Aksan Steel Forging Company have housings with dimensions of 564 x 204 x 40 mm. Figure 3.12 demonstrates this housing on the lower die holder.

In current application, this housing is filled with a one-piece plate in the company. In long run, failure problems occur on this plate because of fatigue. When cracking or fractures are observed in any location of this plate, it is required to change the whole plate. In order to overcome this problem, it is decided to use three separate "Standard Positioning and Support Fixtures" instead of using a single plate to fill the housing. Figure 3.13 shows one of these fixtures. The positioning and support fixtures are smaller than the current plate used. They should be located just below of each cassette. Since they would be standard, many of these fixtures should be produced (i.e. Function Standardization which is explained in Section 2.2.2). When one of these fixtures becomes out of use, it would be easy to replace by a new one.

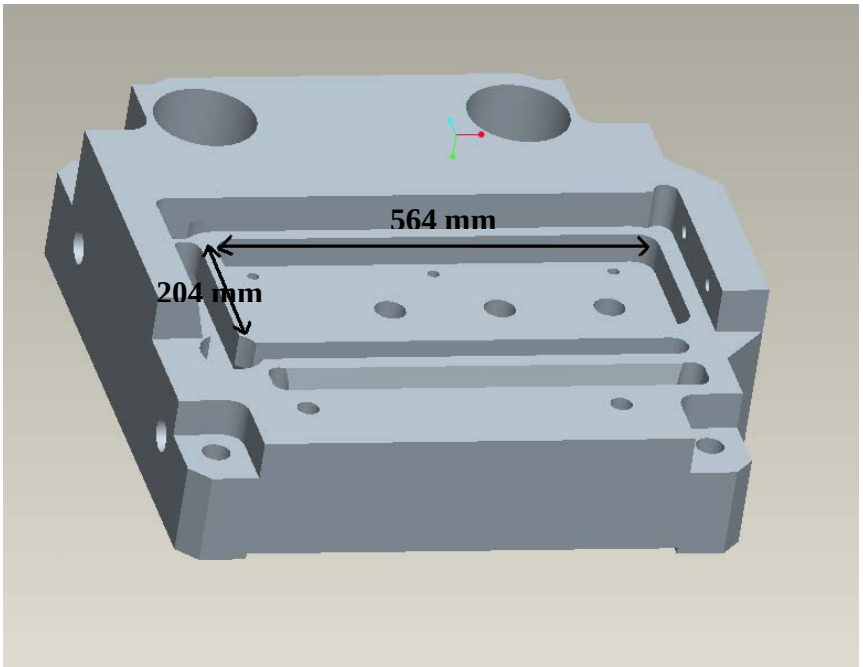

Figure 3.12 Lower Die Holder of Aksan Steel Forging Company

Moreover, these fixtures are not only used as supports for the cassettes and dies from the bottom side, but also used for positioning cassettes to die holders accurately. They ensure precise positioning by V-shaped locators on their top surfaces. As seen in Figure 3.14, there are four pin holes on the bottom surfaces of each cassette. Pins are inserted into these pin holes and afterwards the cassettes can be positioned to the die holders accurately as in Figure 3.15. These pins are seated on the flat and V-shaped locators of standard positioning and support fixtures (i.e. V Locators and Flat Pocket Method which is told in Section 2.3.1)

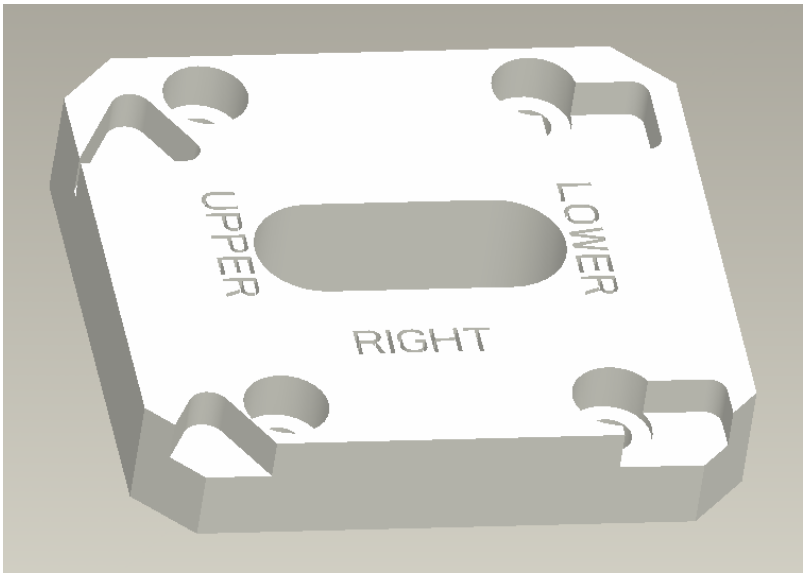

Figure 3.13 Standard Positioning and Support Fixtures

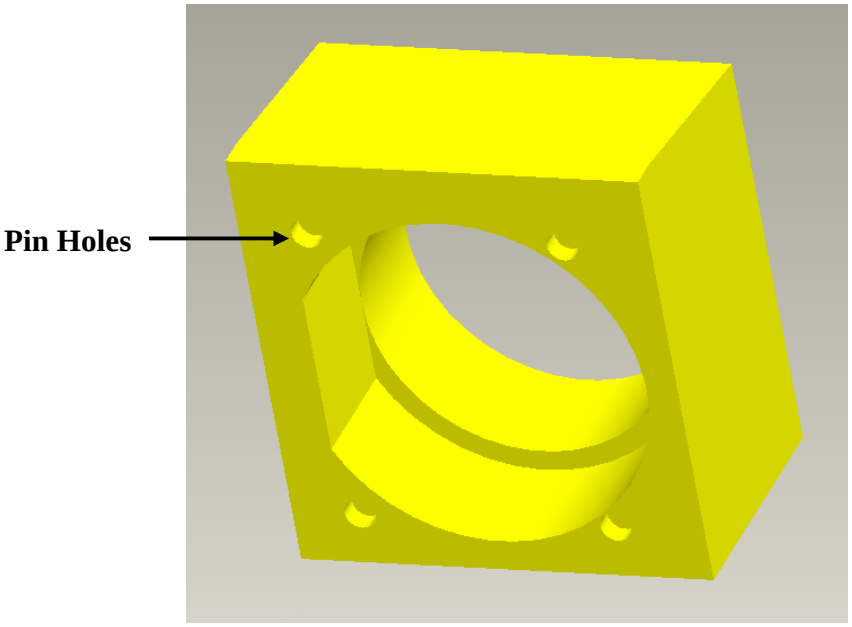

Figure 3.14 Pin Holes at the Bottom Surface on the New Cassettes

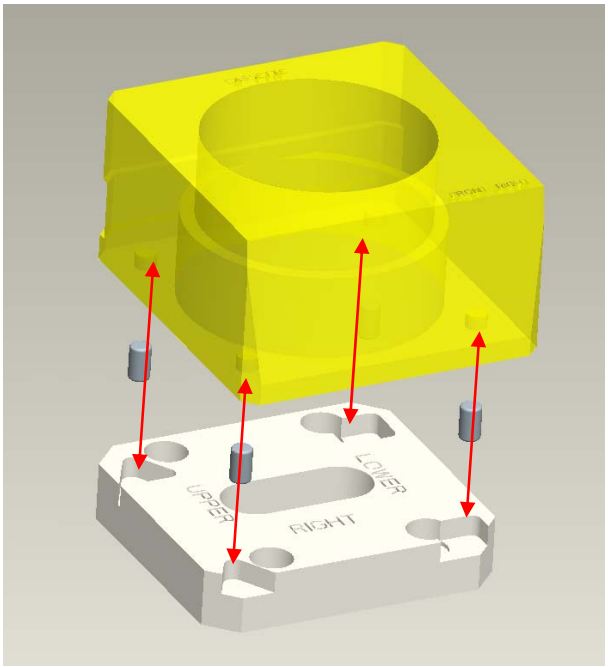

Figure 3.15 Positioning the New Cassettes by Pins

Problem 10: Since a specific depth of material is removed from the die surface during revision, height of the die reduces. For this reason, there is a limit in the number of the revisions of the same die. When the die height reduces below a certain limit, the die is not allowed to be revised any more. Therefore it is important and essential to know how many times a die can be sent to revision.

Solution 10: The total number of revision that can be applied to a die can be marked just over the die surface after each revision operation as in Figure 3.16. For example after the third revision operation, an "REV. 3" can be marked on the die surface. Besides, if there is no other chance for further revision of a die, an indicator like "F" can also be marked just after the revision number to show that this is the final chance for revision. By just considering these markings, it will be much easier and quicker for the company to figure out the revision condition of the dies.

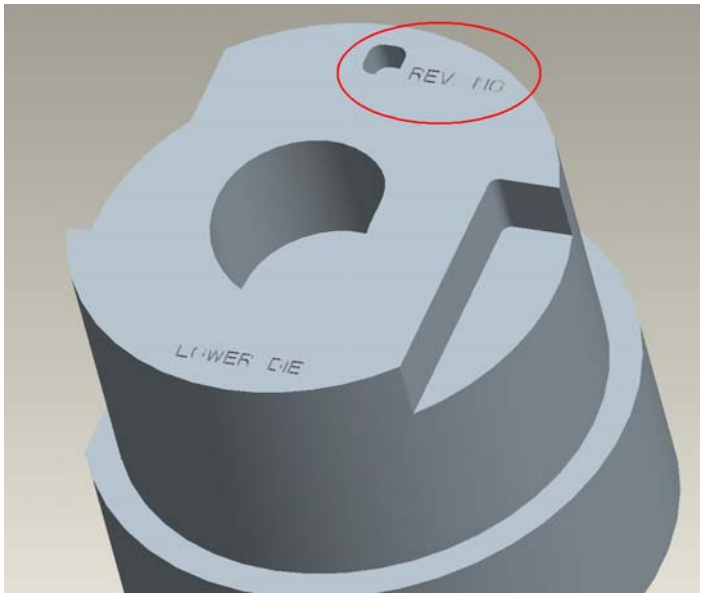

Figure 3.16 Marking the Revision Condition

CHAPTER 4

PROPOSED MODULAR DIE SYSTEM

4.1 Modules of the Modular Die System

The modular die system aims to eliminate the problems encountered during die changing operations in Aksan Steel Forging Company with the proposed solutions discussed in Section 3.2. It also intends to speed up the die changing operations. The components of the new modular die system will be introduced in this section.

After detailed observation and study, the newly designed modular system has been designed to be composed of the following modules regarding practicability and convenience of production:

- Upper Die Holder
- Lower Die Holder
- Upper Cassettes
- Lower Cassettes
- Upper Dies (Preforming & Finishing Dies)
- Lower Dies (Preforming & Finishing Dies)
- Positioning and Support Fixtures
- Shoes (Front Shoes & Side Shoes)
- Supports (Back Supports & Side Supports)
- Pins

The modules that constitute the new modular die system are represented schematically in Figure 4.1. The assemblies of the upper die sets and the lower die sets are shown as solid modules form in Figure 4.2 and Figure 4.3 respectively.

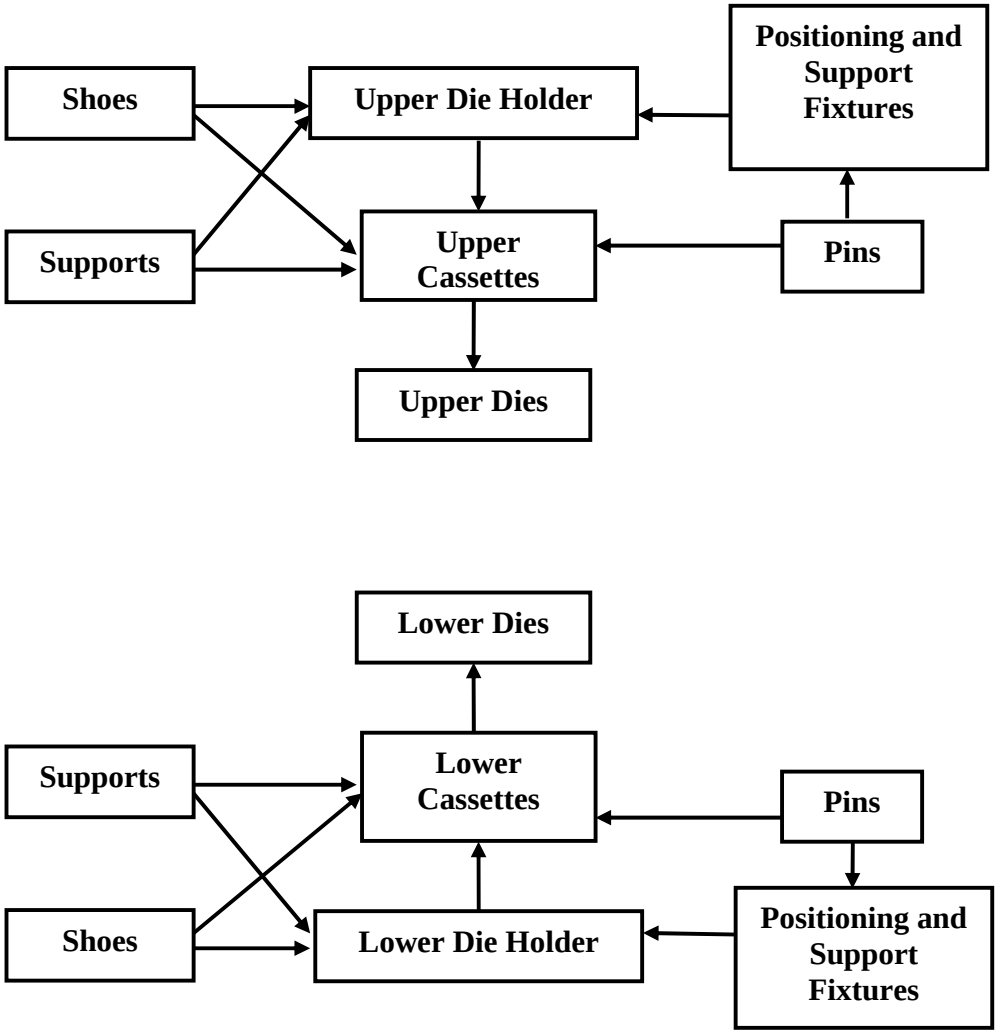

Figure 4.1 Modules of Modular Die System

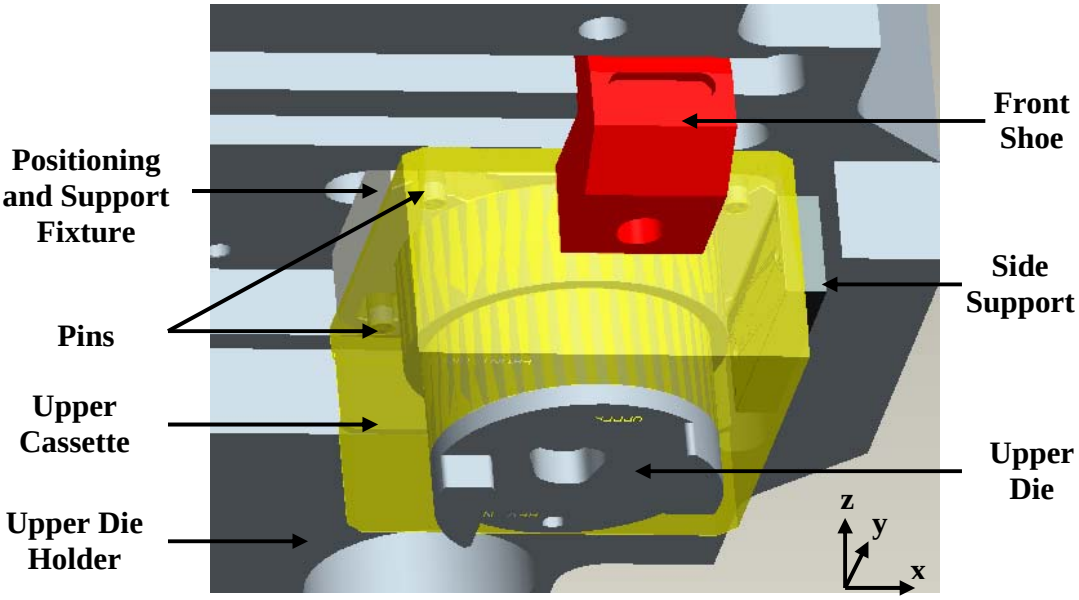

Figure 4.2 Modules of the Upper Die Set

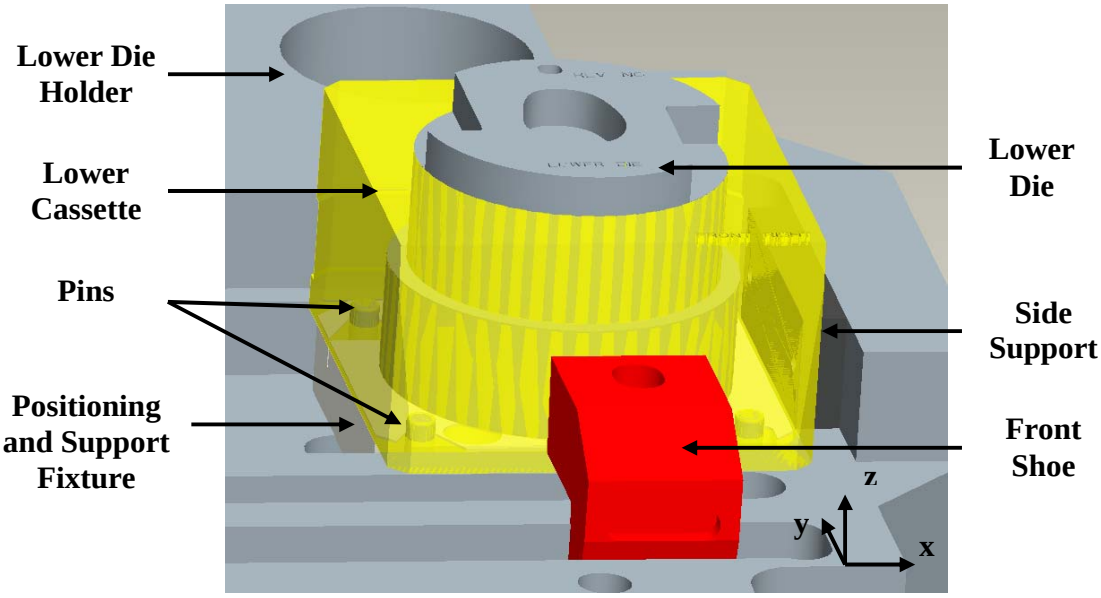

Figure 4.3 Modules of the Lower Die Set

4.2 Assembly and Mounting of the Modular Die System

The mounting processes of the modules which have been introduced in Section 4.1 will be presented in this section. Before performing the die changing operations, it may be useful to check the items which are listed in a checklist. A sample checklist for die changing operations of forging process is given in Appendix A [19].

4.2.1 Assembly of Dies to Cassettes

Instead of the currently used cassettes of Aksan Steel Forging Company which have been given in Figure 3.5, new cassettes with a through hole have been designed. A transparent 3D model of the new lower cassettes and solid model of the lower die are shown in Figure 4.4. The dies are inserted thoroughly into the cassettes from the bottom side. There is not any risk for the dies to come out from the top surface of the cassettes, since the dies are restricted by the step in the cassettes. There is no need to fasten the dies to the cassettes by the shoes in this through hole method. Therefore, fastening of the dies to cassettes is eliminated in this step. This elimination speeds up the external setup operations (by this way, streamlining external setup operations, which is described in Section 2.2.3 is achieved).

The rotational movement of the dies in cassettes is restricted by the planer forms as it is described as “Problem 2” in Section 3.2. The view of a die after inserted into the cassette is shown in Figure 4.5.

The last step is the inserting of the pins into the pin holes which exist on the lower surface of the cassettes. After four of the pins are inserted into the four pin holes of each cassette, the die and cassette sets are ready to be mounted on the die holders.

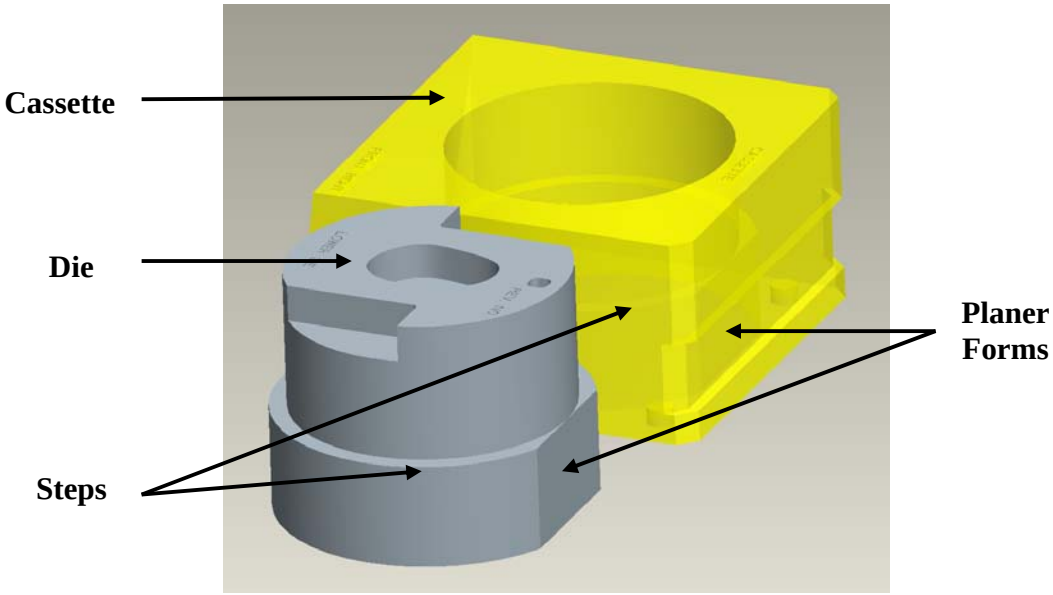

Figure 4.4 Lower Die and Lower Cassette

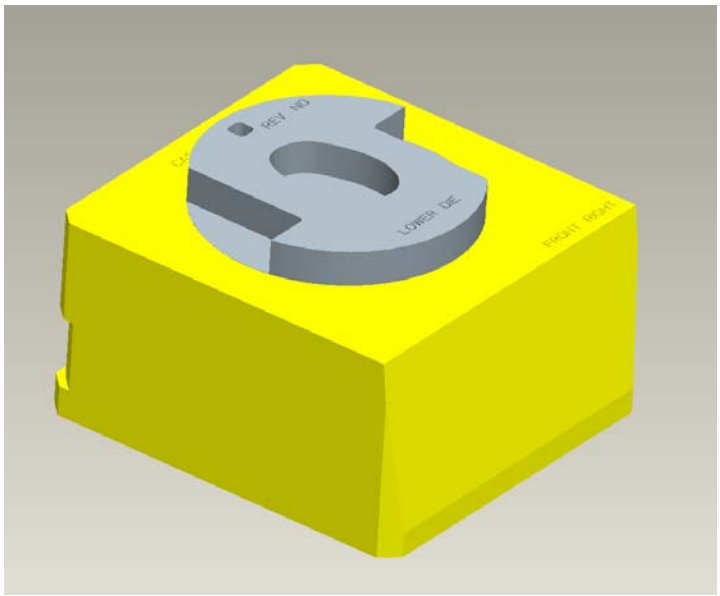

Figure 4.5 Die in Cassette

4.2.2 Assembly of Die-Cassette Pairs to Die Holders

As mentioned related to Problem 9 in Section 3.2, there is housing on forging surfaces of the current upper and lower die holders of Aksan Steel Forging Company. This housing was indicated in Figure 3.12. For the purpose of supporting the dies from the bottom sides, new standard "Positioning and Support Fixtures" have been designed to be located in this housing. These fixtures have been positioned under each die-cassette set. The 3D model of the standard positioning and support fixture was given in Figure 3.13. The three different fixtures have been used for right, middle and left sides of the press as seen in Figure 4.6. The markings as "Right", "Middle" or "Left" are written on the fixtures in order not to confuse them. The middle and the right positioning and support fixtures have some oval-shaped holes to allow ejection operations. The ejection holes have been designed as oval-shaped because the same fixture is used for both of the upper and the lower die holders.

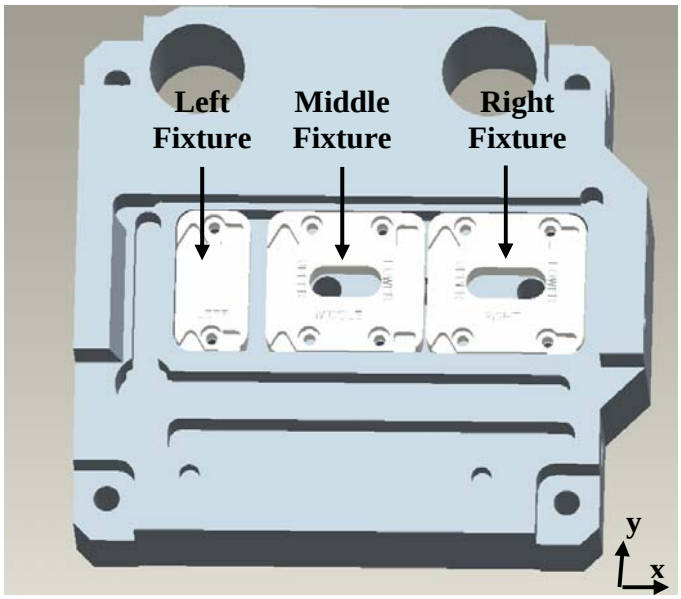

Figure 4.6 Positioning and Support Fixtures on the Die Holder

The right fixture is fastened either to the upper or the lower die holder by means of two Ø 16 mm bolts. This is also valid for the middle and the left positioning and support fixtures. To keep the operator awake in order not to fasten the fixtures from wrong holes, there is some markings on the upper surfaces of the positioning and support fixtures indicating which holes are used for which die holder (i.e. upper or lower).

The positioning and support fixtures ensure the precise positioning of the cassettes to the die holders. This positioning function is performed by V locators and flat pocket method as described in Section 2.4. As indicated in Figure 3.14, there are four pin holes with Ø 15 mm diameter on the bottom surface of each cassette. Four pins are inserted into these holes before the cassettes are positioned on the positioning and support fixtures. The die-cassettes sets with pins are placed on the positioning and support fixtures (and die holders consequently). Initially, the pins are standing in the wide portion of the V-shaped housings as in the case of Figure 4.7(a) and (b). Then, the cassettes are pushed back until the cassettes are gripped by the back supports which are located behind each cassette. When the cassette touches to the back support, the two right pins locating on bottom side of the cassette are seated on the flat surfaces of the right housings (See Figure 4.7 (a) and (b)). Meanwhile, the remaining two left pins are seated on the V-shaped housings and precise positioning is achieved on horizontal direction in this manner. The positioned cassettes on the die holder are shown in Figure 4.8(a) and (b). Then, the cassettes are fastened to the die holders by compressing and fixing the cassettes from the fixing surfaces with the front shoes.

The right and back surfaces of all cassettes operate as 'Resting Surfaces', whereas the left and front surfaces are used as 'Fixing Surfaces'. After the cassettes are supported by the side and back supports from the resting surfaces, they are fixed to the die holders with shoes by fastening from the fixing surfaces. There exist inclinations of 7º on the mating surfaces of the cassettes and the shoes. These inclinations provide tight fastening and prevent slipping of the mating surfaces.

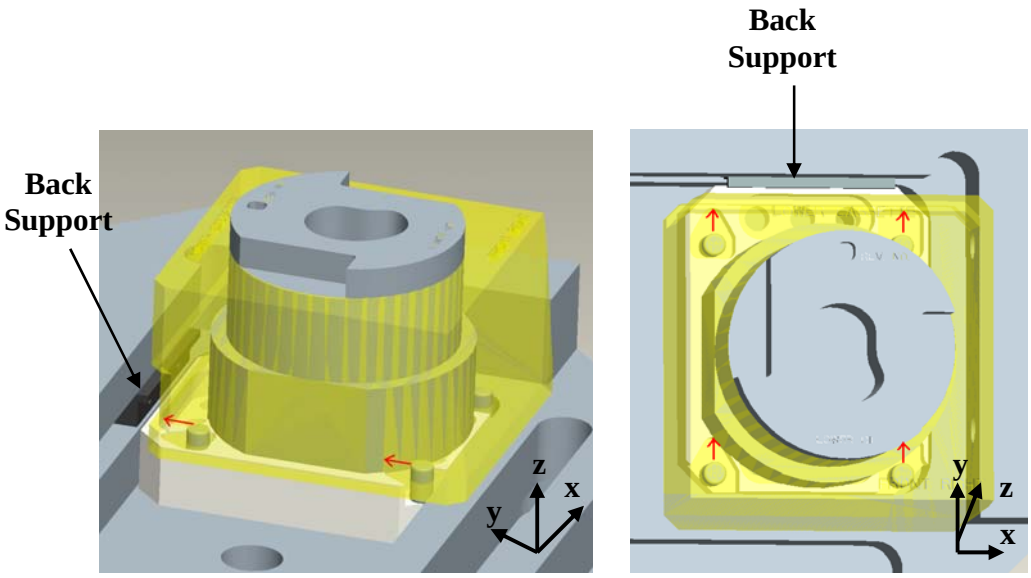

(a) Side View (b) Top View

Figure 4.7 Placing the Cassette to the Die Holder and Pushing It Back

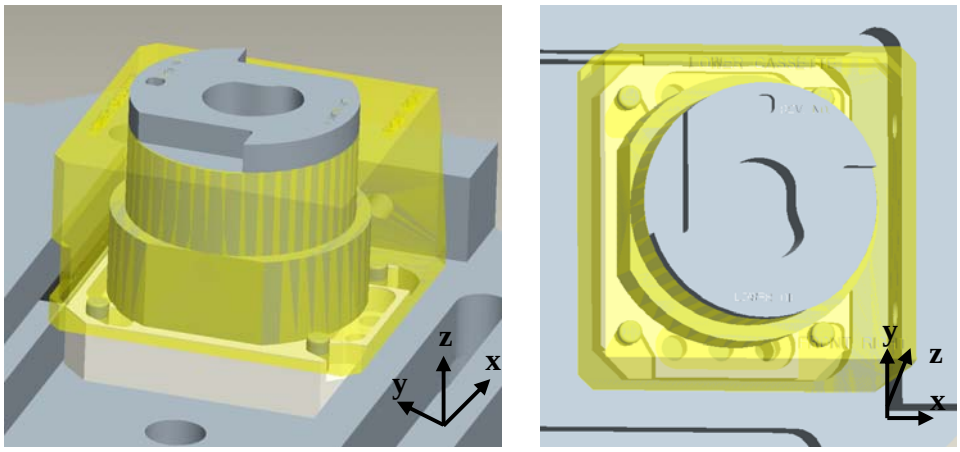

(a) Side View (b) Top View

Figure 4.8 The Positioned Cassette on the Die Holder

The flatness tolerances of the resting surfaces should be so close. Moreover, cleaning of these surfaces is also critical. No any dusts or burrs should remain on these surfaces. Otherwise, the pins under the cassettes will not match with the V-shaped locators of the positioning and support fixtures and the precise positioning cannot be ensured.

Figure 4.9 illustrates the new design of the modular die set. In the figure, three cassettes (two preforming dies and one finishing die) are placed side by side in new modular die set model. While the right resting surface of the right cassette is touching to the bearing surface of the die holder, the left fixing surface of the right cassette touches to the right surface of the middle cassette. Similarly, when the resting surface on right side of the left cassette touches to the left squeezing surface of the middle cassette, the left squeezing surface of the left cassette is restricted by the side shoe. The side shoes are designed to fasten the three cassettes to the die holders on left side. These shoes compress the cassettes from left side and restrict them to slip in horizontal direction.

There are the back supports between the cassettes and the die holders on the back side. Therefore, the back resting surface of lower and upper cassettes do not contact the bearing surface of the die holders directly. The back supports are attached to the die holders by bolts. The back supports hold the cassettes from the slot which locates on the back surface of the cassettes. Mounting operation of the upper die gets easier by means of these supports.

The front surface of a cassette is also fixing surface. As described before, an inclination of 7º is given for effective fastening. As indicated in Figure 4.10, the mating surfaces of the front shoes should also have an inclination of 7º. The fastening of the cassettes by the front shoes restricts the movement of cassettes along the front-to-back direction.

Three front shoes are used for each of the upper and lower die holders, however only one side shoe is used for each die holder (see Figure 4.9).

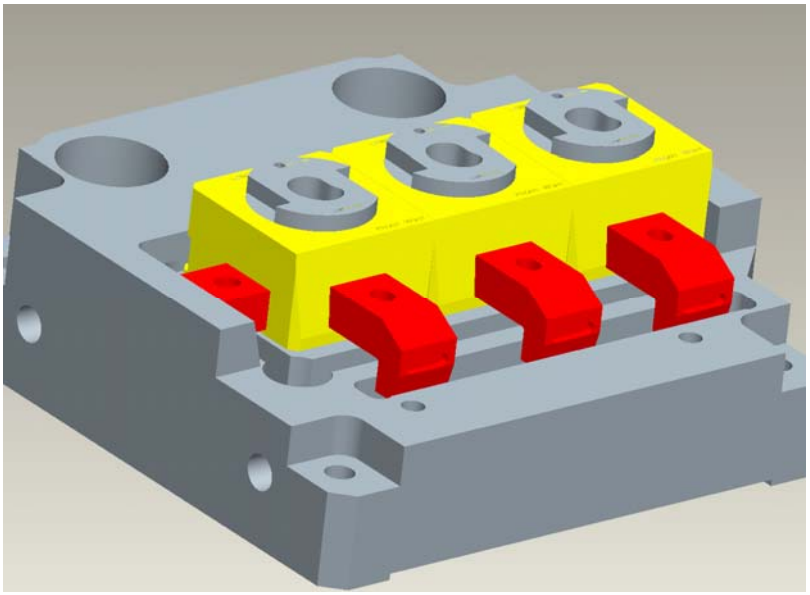

Figure 4.9 Mounting of Three Cassettes Side by Side and Fastening by the Shoes

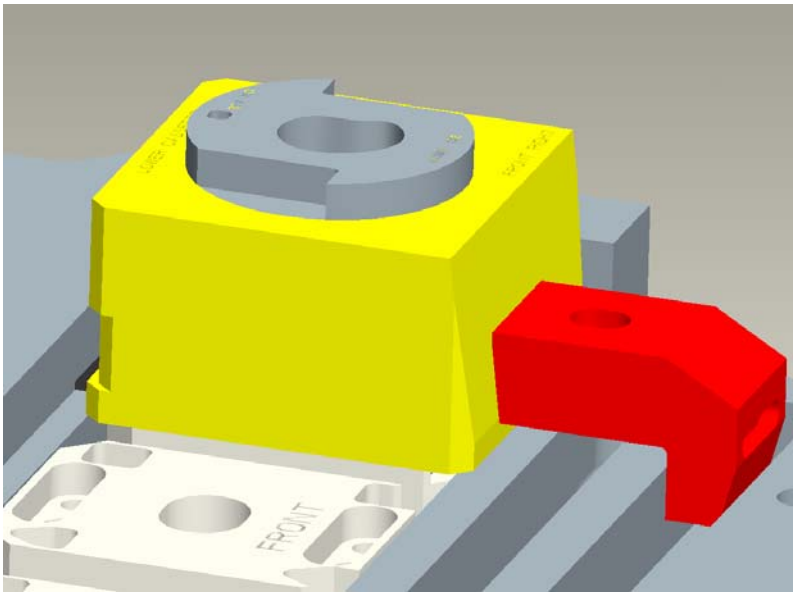

Figure 4.10 Fastening of the Cassettes by the Front Shoes

All of the shoes are fastened to the die holders as follows: The heads of bolts are inserted into the wide holes of the die holders which are near the front-left sides of the upper and lower die holder surfaces. Then, the bolts are slipped along the T-slots of the die holders and positioned. When the bolts are positioned to desired location, the shoes are placed and the bolts are inserted into the oval-shaped holes of the shoes. Finally, the shoes are fixed to the die holders by tightening the bolts by nuts. The washers may also be inserted between the nuts and shoes. All these activities are represented schematically in Figure 4.11.

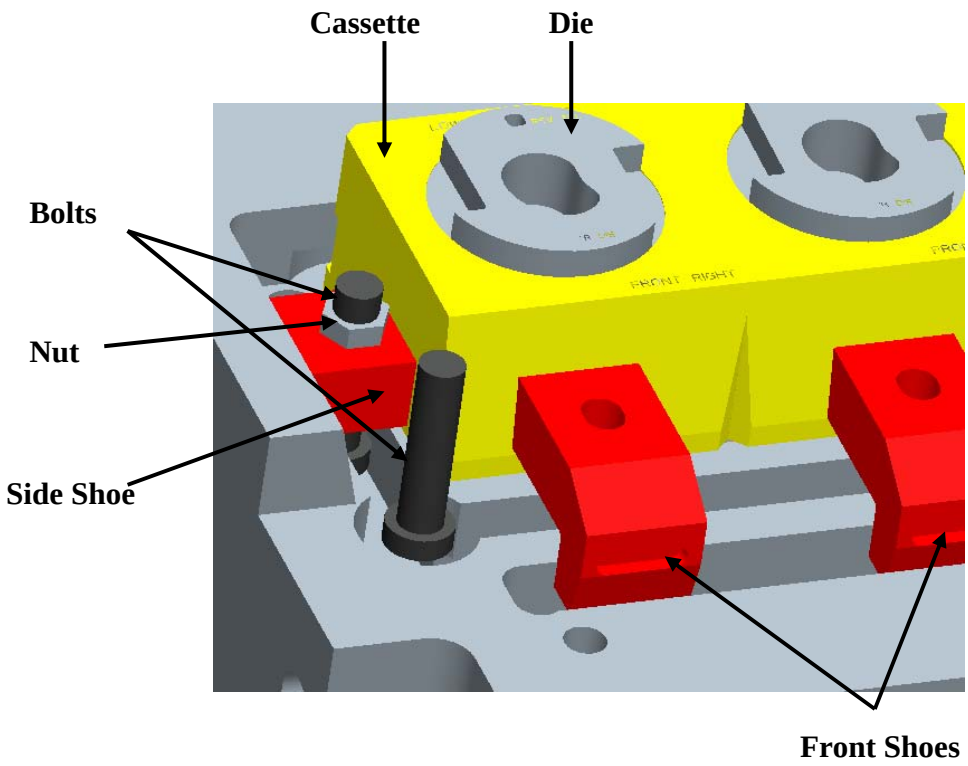

Figure 4.11 Fastening the Shoes to the Die Holders by Bolts

4.3 Step by Step Setup Operations of the Proposed System

In the designed modular die set system, first of all, the dies should be inserted into the cassettes as the external setup operations. Afterwards, the press should be stopped and die-cassette pairs of previous production should be dismounted from the upper and lower die holders of the press. Then, externally prepared new die-cassette pairs should be mounted to the press. When mounting operations of the new die-cassette pairs are finished, the production should be started immediately. Meanwhile, dies of the previous production may be dismounted from the cassettes externally.

The layout of the forging and storage areas of 1000 ton press of Aksan Steel Forging Company is given in Figure 4.12.

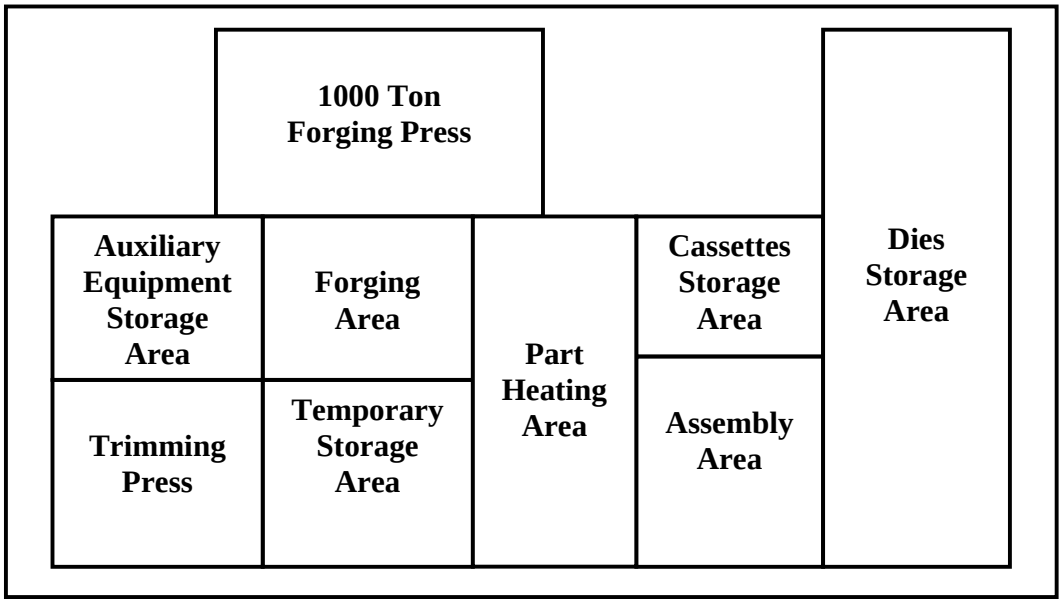

Figure 4.12 Layout for 1000 Ton Press of Aksan Steel Forging Company

4.3.1 Mounting the Dies into the Cassettes

At the first step, the dies are mounted into the cassettes. All operations of mounting dies into cassettes are performed externally. External setup operations are the operations that can be performed during the press is running. The dies are mounted into the cassettes externally as follows:

1) Bring the cassettes from the cassettes storage area to the assembly area.

2) Bring the dies from the dies storage area to the assembly area.

3) Bring the pins from the auxiliary equipment storage area to the assembly area.

4) Insert the dies into the through hole of the cassettes from the bottom surfaces of the cassettes.

5) Push the dies into the cassettes completely and make sure that the planer forms of the dies and cassettes are matched.

6) Insert four pins to pin holes of each cassette for the purpose of precise positioning of the cassettes to the die holders.

7) Inspect if everything is OK, or not.

8) Take all die-cassette pairs to the temporary storage area.

9) Store the die-cassette pairs temporarily.

These operations should be performed for each die-cassette pair.

4.3.2 Dismounting the Die-Cassette Pairs from the Die Holders

When the forging of previous batch has been finished, the press is stopped and the die-cassette pairs of the previous production are dismounted from the press. Some operations of dismounting the die-cassette pairs from the die holders may be performed externally whereas some operations may be performed internally (i.e. when the press is

not running). The external and internal setup operations are indicated in parenthesis for each operation.

The die-cassette pairs are dismounted from the upper and lower die holders of the press according to the following steps:

1) Unfasten both of the side shoes from upper and lower die holders (internal setup).

2) Unfasten the front shoes of the upper die-cassette pairs (internal setup).

3) Remove the upper die-cassette pairs from the upper die holders of the press (internal setup).

4) Unfasten the front shoes of the lower die-cassette pairs (internal setup).

5) Remove the lower die-cassette pairs from the lower die holders of the press (internal setup).

6) Take all of the die-cassette pairs from the forging area to the temporary storage area (external setup).

7) Store all of the die-cassette pairs temporarily in the temporary storage area (external setup).

8) Take all of the front shoes from the forging area to the auxiliary equipment storage area (external setup).

9) Store the front shoes in auxiliary equipment storage area (external setup).

4.3.3 Mounting the Die-Cassette Pairs to the Die Holders

Similarly, some operations of mounting the die-cassette pairs to the die holders may be performed externally whereas some operations may be performed internally. The external and internal setup operations are indicated in parenthesis for each operation.

The die-cassette pairs of new production should be mounted to the die holders of the press according to the following steps:

1) Bring all of the die-cassette pairs (with pins attached on the pin holes of the cassettes) from the temporary storage area to the forging area (external setup).

2) Bring and place the upper die-cassette pairs on the upper positioning and support fixtures and the upper die holder consequently (internal setup).

3) Push the upper die-cassette pairs back until the cassettes are griped by the back supports (internal setup).

4) Make sure that the pins are seated on the V-shaped housings of the upper positioning and support fixtures and precise positioning is achieved in horizontal (right-to-left) direction (internal setup).

5) Bring all of the front shoes from the auxiliary equipment storage area to the forging area (external setup).

6) Fasten the upper die-cassette pairs to the upper die holder by the front shoes to restrict the movement of the cassettes in front-to-back direction (internal setup).

7) Bring and place the lower die-cassette pairs on the lower positioning and support fixtures and the lower die holder consequently (internal setup).

8) Push the lower die-cassette pairs back until the cassettes are griped by the back supports (internal setup).

9) Make sure that the pins are seated on the V-shaped housings of the lower positioning and support fixtures and precise positioning is achieved in horizontal (right-to-left) direction (internal setup).

10) Make sure that all of the dies are in desired position (internal setup).

11) Fasten the lower die-cassette pairs to the lower die holder by the front shoes (internal setup).

12) Fasten all of the die-cassette pairs by the side shoes (internal setup).

13) Preheat the dies (internal setup).

14) Activate the press (internal setup).

4.3.4 Dismounting the Dies from the Cassettes

Finally, the dies of previous production should be removed from the cassettes. Similar to the operations of mounting the dies into the cassettes, all operations of dismounting the dies from the cassettes are performed as external setup. The dies are removed from the cassettes externally as follows:

1) Bring the die-cassette pairs from the temporary storage area to the assembly area.

2) Remove the dies from the cassettes.

3) Remove the four pins locating on the lower surface of each cassette.

4) Take the pins from the assembly area to the auxiliary equipment storage area.

5) Store the pins in the auxiliary equipment storage area.

6) Perform the function checks operations of the dies.

7) Perform the function checks operations of the cassettes.

8) Take the dies from the assembly area to the dies storage area.

9) Transport the cassettes from the assembly area to the cassettes storage area.

10) Store the dies in the dies storage area.

11) Store the cassettes in the cassettes storage area.

This procedure should be performed for all die-cassette pairs.

Since internal setup operations are performed when the press is idle, the time spent for these operations are regarded as unproductive time. As it is explained in Chapter 2 and represented by Figure 2.2, SMED takes only internal setup operations as changeover.

CHAPTER 5

APPLICATION OF THE MODULAR DIE SYSTEM IN AKSAN STEEL FORGING COMPANY

Aksan Steel Forging Company has three different forging presses with 1000 ton, 1600 ton and 4000 ton capacities. In this study, the proposed modular die system which was described in Chapter 4 has been applied for 1000 ton press to reduce die changing time and simplify the changeover operations. The properties of 1000 ton Stankoimport press in Aksan Steel Forging Company are tabulated in Appendix B [8].

5.1 Data Collection Study in Aksan Steel Forging Company

The important point to be concerned during the design stages of new modular die set is the external dimensions of the dies and cassettes. For this purpose, a statistical study has been carried out in Aksan Steel Forging Company regarding the products and die changing operations of the 1000 ton press. In this study, the products which had been forged with 1000 ton forging press during the years 2006 and 2007 were analyzed. The result of this study has been used for determining the standard die and cassette dimensions of the new modular die sets.

The reference system indicating X, Y and Z axes for the particular press has been given in Figure 3.1

During the years 2006 and 2007, 102 different part geometries were forged in the press with 1000 ton capacity in Aksan Steel Forging Company. 78 of them were non-circular geometries, whereas 24 of them were circular. The outer dimensions of these products in X, Y and Z axes and diameters can be seen in Appendix C. These products

were grouped according to their dimensional magnitudes in X, Y and Z axes and diameters. The distributions of 102 non-circular and circular parts according to their dimensions in X, Y and Z axes and diameters have been given as follows:

The distribution of 78 non-circular part geometries according to their dimensions in X axis, x, are tabulated in Table 5.1 and presented in Figure 5.1 as column chart.

Table 5.1 Distribution According to X Dimension, x, of Non-Circular Part Geometries

X Dimension Intervals (mm)	Numbers of Different Part Geometries
$x \leq 30$	10
$30 < x \leq 60$	31
$60 < x \leq 90$	21
$90 < x \leq 120$	9
$120 < x \leq 150$	4
$150 < x \leq 180$	2
$180 < x$	1
Total:	78

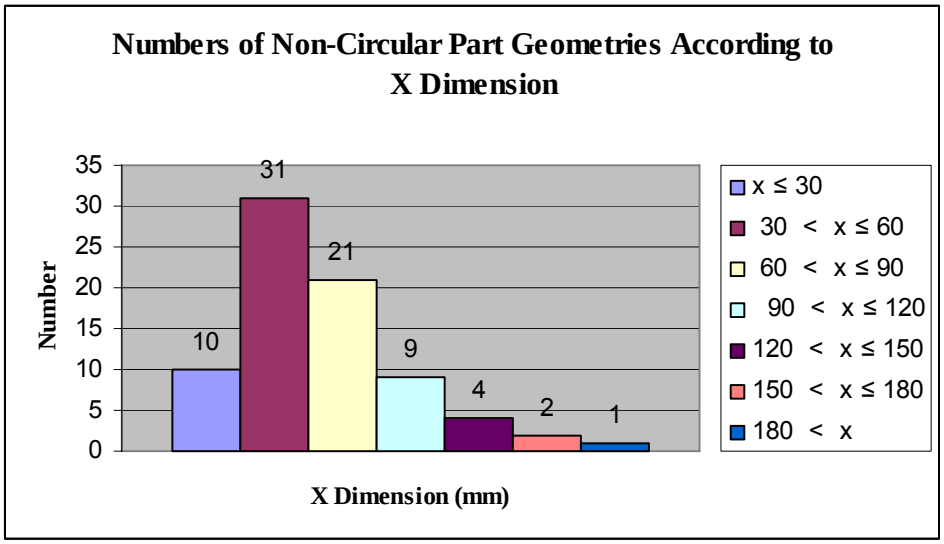

Figure 5.1 Distribution According to X Dimension, x, of Non-Circular Part Geometries

The distribution of 78 non-circular part geometries forged with 1000 ton press in Aksan Steel Forging Company according to their dimensions in Y Axis, y, are tabulated in Table 5.2 and presented in Figure 5.2 as column chart.

Table 5.2 Distribution According to Y Dimension, y, of Non-Circular Part Geometries

Y Dimension Intervals (mm)	Numbers of Different Part Geometries
$y \leq 30$	2
$30 < y \leq 60$	19
$60 < y \leq 90$	19
$90 < y \leq 120$	21
$120 < y \leq 150$	10
$150 < y \leq 180$	4
$180 < y$	3
Total:	78

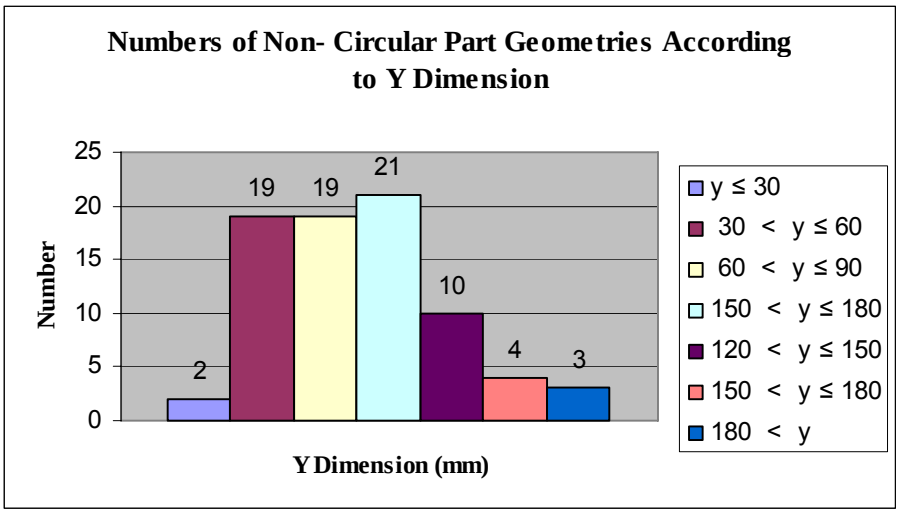

Figure 5.2 Distribution According to Y Dimension, y, of Non-Circular Part Geometries

24 different circular parts were forged with 1000 ton Stankoimport press of the company during 2006 and 2007. The distribution of these circular part geometries regarding diameters, Ø, are tabulated in Table 5.3 and given in Figure 5.3 as column chart.

Table 5.3 Distribution According to Diameter, Ø, of Circular Part Geometries

Diameter Intervals (mm)	Numbers of Different Part Geometries
Ø ≤ 30	0
30 < Ø ≤ 60	6
60 < Ø ≤ 90	9
90 < Ø ≤ 120	5
120 < Ø ≤ 150	2
150 < Ø ≤ 180	1
180 < Ø	1
	Total: 24

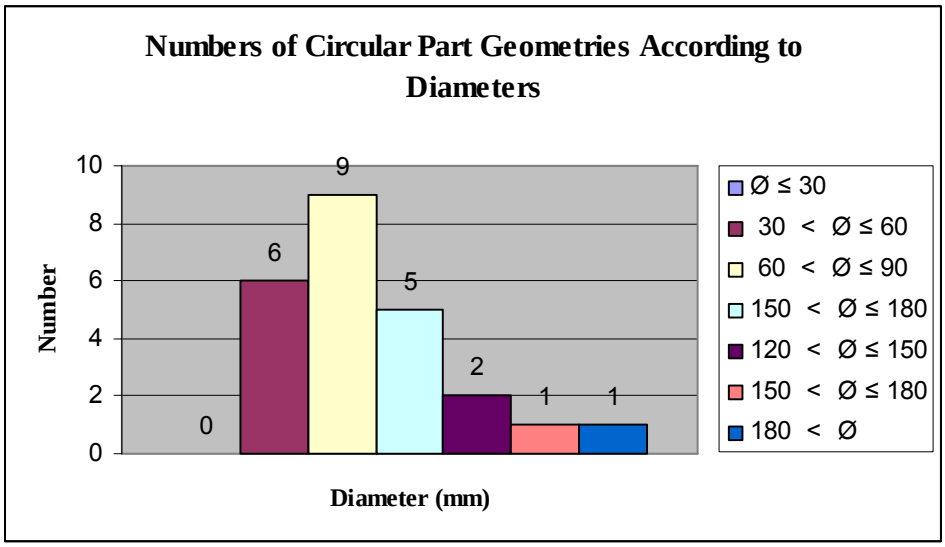

Figure 5.3 Distribution According to Diameter, Ø, of Circular Part Geometries

The distribution of the 102 different part geometries, including all of the non-circular and circular ones, according to their Z height, z, are tabulated in Table 5.4 and presented in Figure 5.4 as column chart.

Table 5.4 Distribution According to Z Dimension, z, of Non-Circular and Circular Part Geometries

Z Dimension Intervals (mm)	Numbers of Different Part Geometries
$z \leq 30$	48
$30 < z \leq 60$	41
$60 < z \leq 90$	7
$90 < z \leq 120$	2
$120 < z \leq 150$	2
$150 < z \leq 180$	0
$180 < z \leq 250$	2
Total:	102

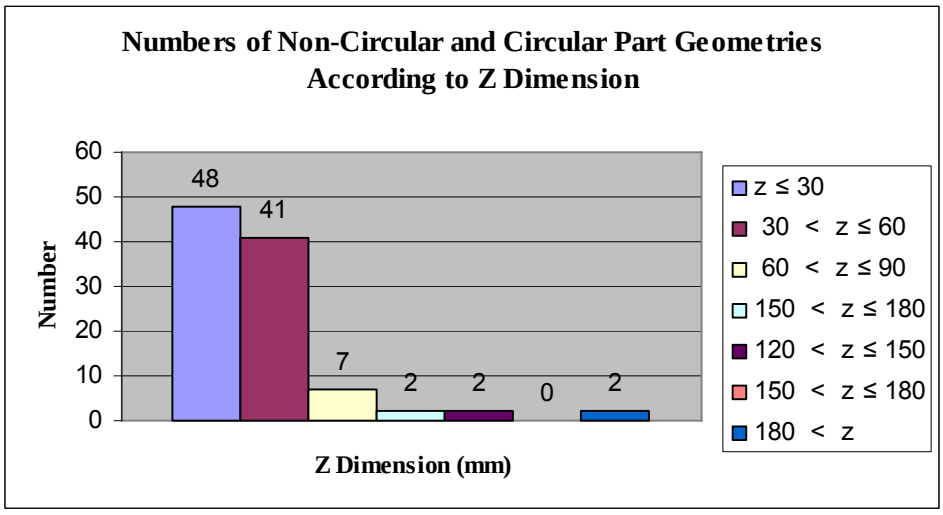

Figure 5.4 Distribution According to Z Dimension, z, of Non-Circular and Circular Part Geometries

According to data collection study, all of the 102 different part geometries required one performing operation. 73 different part geometries out of 102 geometries required one of the bending, lengthening or upsetting operations additionally. The remaining 29 geometries needed no bending, lengthening or upsetting operations. This data is also tabulated in Table 5.5.

Table 5.5 Distribution of Number of Different Part Geometries According to the Operations Required

Operations Required	Total Numbers of Operations	Numbers of Different Part Geometries
One Preforming + Finishing	2	29
One of the Bending, Lenghtening or Upsetting Operations + One Preforming + Finishing	3	73
		Total: 102

5.2 Determination of Standard Die and Cassette Dimensions

During the determination of outer dimensions of the cassettes and the dies for die holders of Aksan Steel Forging Company, the following items should be considered:

- In order to mount the cassettes and the bending/lengthening/upsetting/idle dies, the total available lateral dimension (i.e. the dimension in X direction) of the upper and the lower die holders of Aksan Steel Forging Company is 560 mm which is the distance between the standard side shoes and the side supports, as indicated in Figure 5.5.

- The total available dimension of the upper and the lower die holders of Aksan Company in Y direction is 235 mm which is the distance between the standard front shoes and the back supports as can be seen in Figure 5.5.

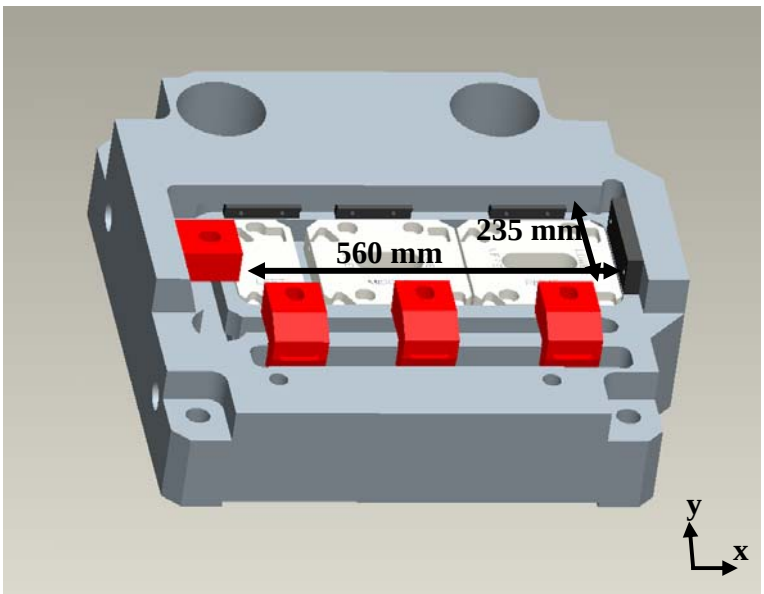

Figure 5.5 The Total Available Dimensions on the Die Holders of Aksan Steel Forging Company in X and Y Directions

- The shut height of the 1000 ton press of the company is 560 mm as seen in Figure 5.6. This is the minimum distance between the anvil and the ram at bottom dead center. By using the current die holders of Aksan Steel Forging Company, the allowable die (and cassette) mounting distance is 270 ± 10 mm.

- For the cassettes, 25-30 mm wall thickness (i.e. the distance between the die hole and the outer walls of the cassettes) is sufficient for forging applications [8].

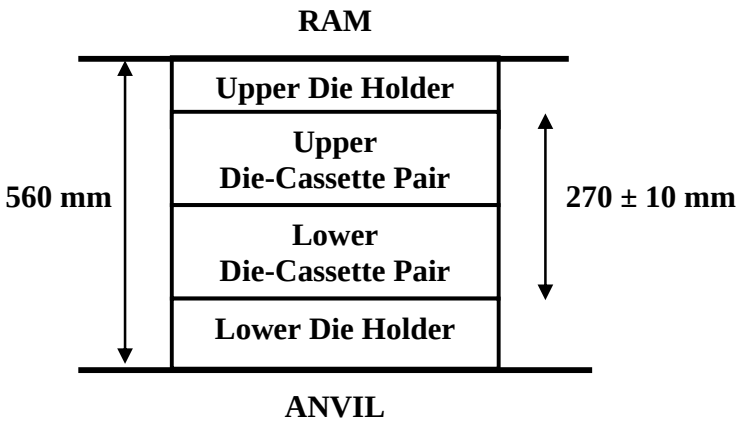

Figure 5.6 The Die Mounting Distance in Z Direction

- For the dies, 20 mm wall thickness (i.e. the distance between the die cavity and the outer walls of the dies) is sufficient for forging applications [8].
- The minimum thickness between the die cavity and the bottom surface of the die is 25 mm in forging dies [8].
- During the data collection study, it has been observed that 73 different part geometries out of 102 geometries require three stages which include one of the bending, lengthening or upsetting operations, one performing and one finishing operation as seen in Table 5.5. When the dies used for bending, lengthening or upsetting operations have been examined, it has been seen that 120 mm in X direction is required for bending/lengthening/upsetting stage.

Regarding the available lateral dimension (i.e. the dimension in X direction) of the die holders of the company (560 mm) and the width of the bending/lengthening/upsetting/idle dies (120 mm), outer dimensions of the cassettes in X direction should be 220 mm for each cassette.

The available dimension of the die holders in Y direction was 235 mm, so the outer dimensions of the cassettes in Y direction should be 235 mm.

By considering above limitation, the outer geometries of the cassettes are designed as 220 x 235 x 120 mm for the die holders of Aksan Steel Forging Company as seen in Figure 5.7. The technical drawings of the cassettes are given in Appendix D.

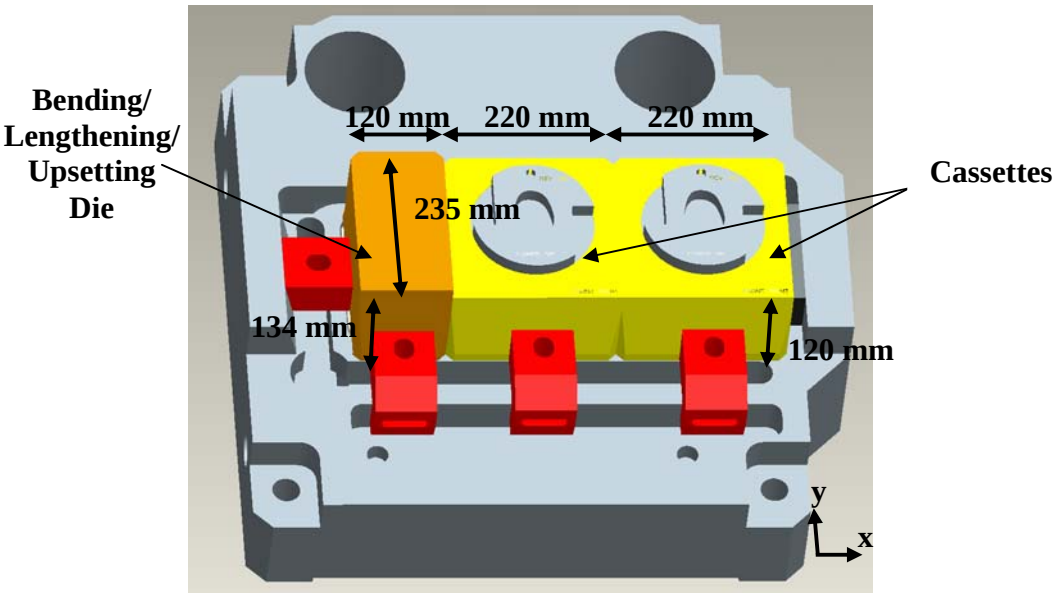

Figure 5.7 Dimensions for the First Alternative Dimensional Set

The outer dimensions of the bending/lengthening/upsetting/idle dies are designed as 120 x 235 x 134 mm for the company as seen in Figure 5.7. The technical drawing can be found in Appendix D.

Since the X dimensions of the cassettes are narrower then the Y dimensions of the cassettes, the diameters of the dies should be determined considering the X dimension of the cassettes. Regarding that 30 mm wall thickness is sufficient for the

cassettes; the outer diameters of the dies are Ø160 mm. The total heights of the upper and lower dies (i.e. the dimensions in Z direction) should be the allowable die mounting distance which is 270 ± 10 mm. Appendix D includes the technical drawings of the upper and the lower dies for test part geometry.

If 20 mm wall thickness is left radially for the distance between the die cavity and the outer walls of the dies, the maximum envelope of the die cavity can be calculated as to Ø120 mm. Since the minimum thickness between the die cavity and the bottom surface of the upper and lower dies are 25 mm, the maximum allowable part height for the new system is 250 mm. So the proposed system can be used for the parts which can be closed by the envelope of Ø120 x 250 mm.

As given in Table 5.1 and Figure 5.1, 71 different part geometries out of 78 geometries have the maximum X dimension in the interval of 0 – 120 mm; and as seen in Table 5.2 and Figure 5.2, 61 different part geometries have the maximum Y dimension in the interval of 0 – 120 mm. The intersection of these two sets, 53 different part geometries have the maximum X and Y dimensions in the interval of 0 – 120 mm. Moreover, 20 different part geometries out of 24 geometries have the maximum diameters in the same interval according to Table 5.3 and Figure 5.3. Table 5.4 and Figure 5.4 show that all of the 102 different part geometries have the maximum dimension in Z direction smaller than 250 mm. Consequently, the new system is applicable to 73 non-circular and circular part geometries of 102 geometries which were forged during the years 2006 and 2007 in Aksan Steel Forging Company. The applicability of the can be seen in Table 5.6.

The cassettes of the modular die set system cannot be used for the part geometries having one of the X dimensions, Y dimensions or diameters greater than 120 mm. For these excessive geometries, the dies may be mounted to the die holders directly without using the cassettes. The methods which were suggested in solutions for Problem 8 and 9 of Section 3.2 about the markings of the cassettes and precise positioning of the

cassettes on the positioning and support fixtures should be applied to the dies directly in these cases.

Table 5.6 Applicability of the System to the Part Geometries That Were Forged During 2006 and 2007 on 1000 Ton Forging Press in Aksan Steel Forging Company

Total numbers of different part geometries	The numbers of part geometries that can be forged by the new system (In the envelope of Ø120 x 250 mm)	Applicability of the new system
102	73	72 %

In this study, a second alternative dimension set is also designed for the forging processes of Aksan Steel Forging Company requiring two performing operations and one finishing operation. Three standard cassettes and three standard dies with the same outer dimensions are used in this set. Three units of cassettes can be mounted side by side to each of the lower and upper die holders of the company as shown in Figure 5.8. In this set, shorter side shoes and longer front shoes are used compared to the first alternative set. No side supports are used. So the total available dimensions in X and Y directions of the die holders are 600 mm and 200 mm respectively for this set. The outer geometry of the cassettes of the second alternative set is designed as 200 x 200 x 120 mm for the die holders of the Company. The outer dimensions of the cassettes of the second alternative dimension set are smaller than the ones of the first set. The outer diameters of the dies of the second alternative set are designed as Ø150 mm. The technical drawings of the modules belonging to the second alternative dimensional set can be seen in Appendix E. If 20 mm is left for wall thickness of dies, the geometries

which can be closed by the envelope of Ø110 x 250 mm may be forged by this dimensional set.

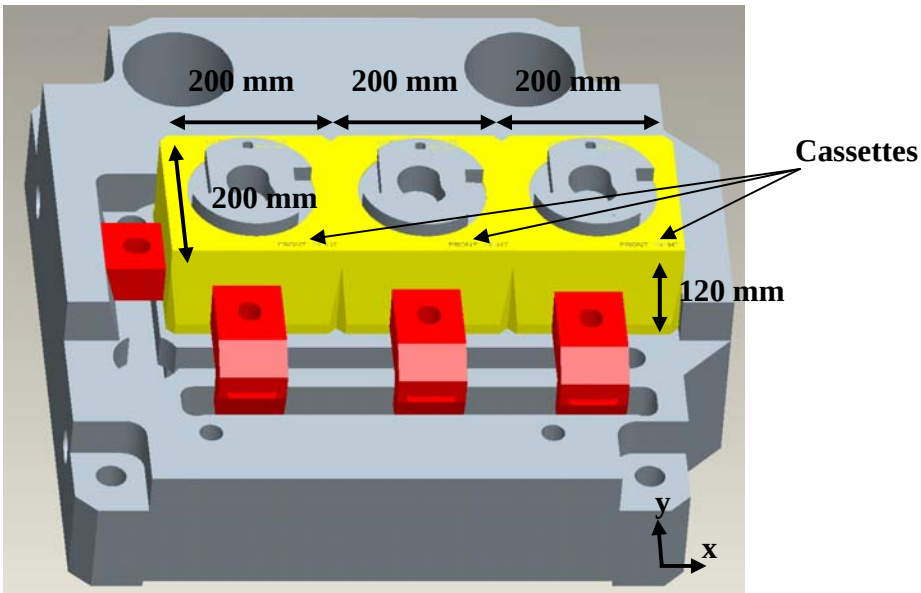

Figure 5.8 Dimensions for the Second Alternative Dimensional Set

CHAPTER 6

MANUFACTURING AND TESTS OF PROPOSED SYSTEM IN AKSAN STEEL FORGING COMPANY

6.1 Manufacturing Processes of New Modular Die System

New modular die system is composed of several modules. The list of these modules is given in Section 4.1. During the design stages of these elements, practicability and ease of production were the main matters to consider. In this section, the manufacturing processes of the modules that constitute the new modular die set will be described. All productions were carried out in production plant of Aksan Steel Forging Company in Balıkhisar, Ankara, by using their CNC lathes and CNC milling machines.

6.1.1 Manufacturing Processes of the Cassettes

The cassettes were produced from Alvar 14 Steels and 2714 Steels for tests in Aksan Steel Forging Company. First of all, the block materials were cut to the desired outer dimensions of 235 x 220 x 120 mm. The inclinations of 7º were machined on the front surfaces of the cassettes. The slots with a depth of 6.5 mm were opened on the back surfaces of the cassettes in milling machines. These slots were used for fastening the cassettes to the die holders by the back supports. All corners of the cassettes were chamfered as 10 mm x 45º. Then the through holes of Ø160 mm were opened at the center of the cassettes for the dies. The diameters of these die holes were extended to Ø180 mm at end of the holes with a depth of 60 mm. The dies would seat on these steps in the cassettes. However, Ø180 mm holes were not machined fully cylindrical. Some

regions of the holes were left planer as in Figure 4.4. These planer forms restrict the rotational movement of the dies in cassettes. Afterwards, four Ø15 mm pin holes were opened on the lower surfaces of the cassettes.

Finally the marking operations were performed. The labels of “Cassette” were marked on the top surfaces of the cassettes and the labels of “Front-Right” were marked on the front-right corners of the top surfaces. These labels were marked for the ease of usage and for preventing confusions and mistakes.

The two pairs of these cassettes have been produced for the test operations in Aksan Steel Forging Company. One pair has been used for preforming application and the second pair has been used for finishing operation. The cassettes can be seen in Figure 6.1. A pair of idle dies has also been used in the tests. Since the part used in the tests has not required bending, lengthening or upsetting operation, bending/lengthening/upsetting/idle dies were used as idle. The production stages of idle dies were similar to that of the cassettes. Figure 6.2 shows the produced idle dies. The technical drawings of the cassettes and bending/lengthening/upsetting/idle dies of the test part geometry are given in Appendix D. The technical drawings belonging to the second alternative dimensional set are supplied in Appendix E.

6.1.2 Manufacturing Processes of the Dies

The dies were produced from the material that has better mechanical properties relative to the material of the cassettes. Dievar Steels or 2714 Steels were used for the dies of tests in Aksan Steel Forging Company.

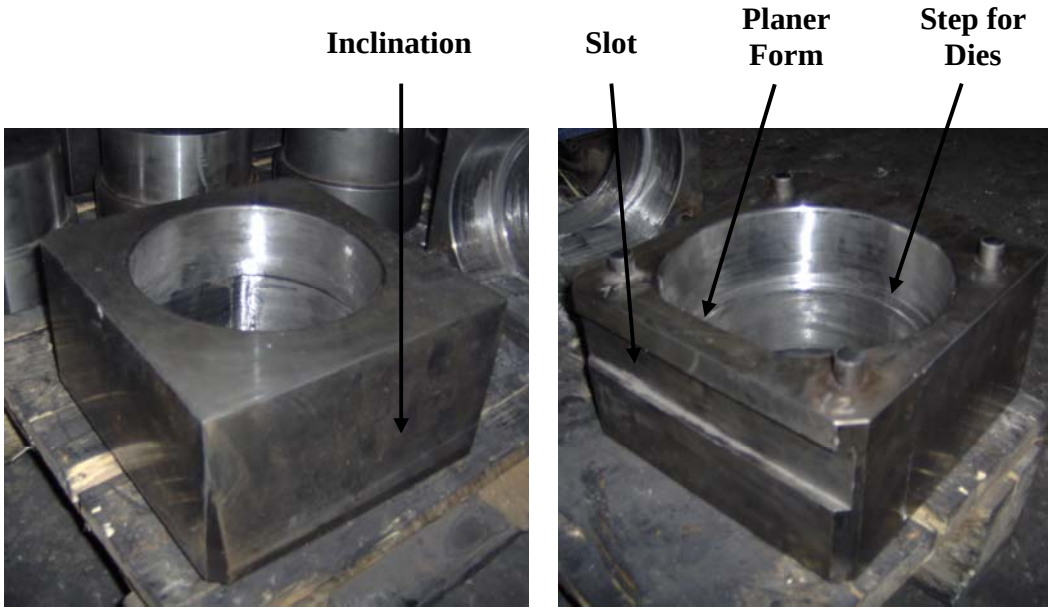

(a) Top Surface **(b) Bottom Surface**

Figure 6.1 The Cassettes of the Test Part

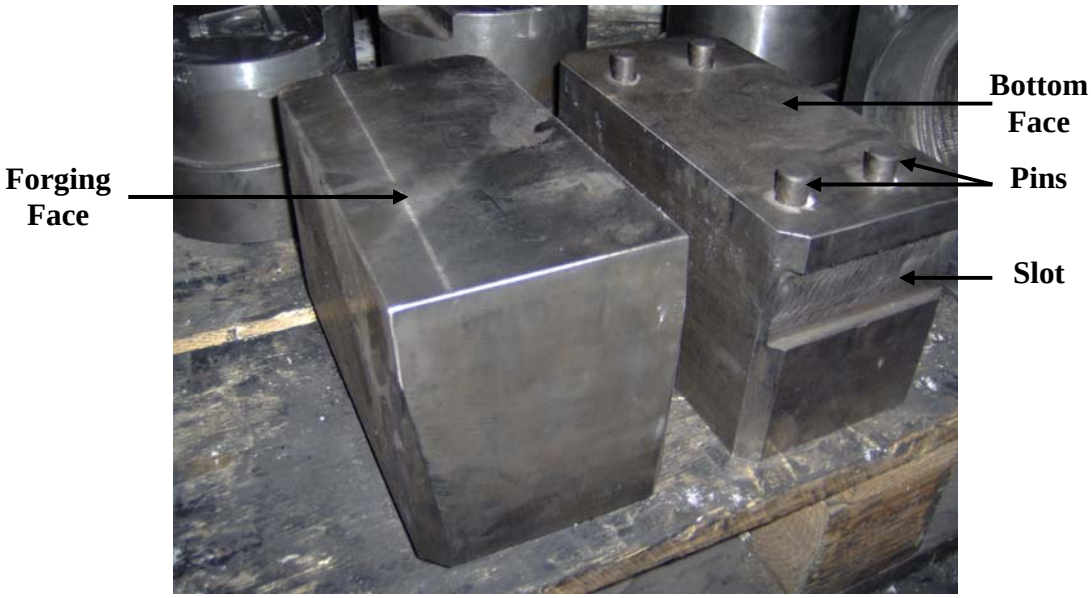

Figure 6.2 The Idle Dies of the Test Part

Initially, the cylindrical raw materials were machined in CNC turning lathe and the desired outer dimensions which is Ø180 mm were obtained. Afterwards, the ends of the dies were left Ø180 mm with a thickness of 60 mm, and the diameters of the remaining parts were reduced to Ø160 mm. Planer forms were also machined on the dies to match with the planer forms of the cassettes. Planer forms were produced in CNC milling machines. The marking operations were carried out on the top surfaces finally. The labels of "Upper Die" or "Lower Die" were marked on the surfaces of the dies accordingly.

The four of the dies have been produced for test part in Aksan Steel Forging Company. One pair has been used for preforming application and the second pair has been used for finishing. The preforming and finishing dies which have been used in the tests can be seen in Figure 6.3 and Figure 6.4 respectively. The technical drawings of these dies are present in Appendix D. The technical drawings of the dies belonging to the second alternative dimensional set are also given in Appendix E.

Figure 6.3 The Preforming Dies of the Test Part

Figure 6.4 The Finishing Dies of the Test Part

6.1.3 Manufacturing Processes of the Positioning and Support Fixtures

2714 Steels were used for the positioning and support fixtures of the test operations in Aksan Steel Forging Company. Three couples of the fixture were needed for each production (see Figure 6.5 and Figure 6.6) The fixtures of the first couple were mounted under the upper and lower die-cassette pairs which were mounted on the right side. Similarly, the fixtures of the second couple were mounted under the upper and lower die-cassette pairs which were mounted on the middle side. The fixtures of the last couple were mounted under the upper and lower die-cassette pairs (idle dies in the tests) on the left side. When one fixture of a couple was mounted under the upper die-cassette pair, the other fixture of the couple was mounted just under the lower die-cassette pair. Briefly, for one production of the press it has been needed to use six positioning and support fixtures totally.

The positioning and support fixtures which were used during tests in Aksan Steel Forging Company are given in Appendix D. The technical drawings of the fixtures belonging to the second alternative dimensional set can be found in Appendix E.

Figure 6.5 Positioning and Support Fixtures of Upper Side

For the tests of the proposed system, two of the right, two of the middle and two of the left positioning and support fixtures have been produced in Aksan Steel Forging Company. All of the fixtures were produced in CNC milling machines. At first step, the outer dimensions of the right and middle fixtures were reduced to 216 x 200 x 41 mm. The outer dimensions of the left fixtures were reduced to 200 x 100 x 41 mm. Then, the chamfers of 20 mm x 45º were machined on corners of all fixtures. Afterwards, the V locators and flat pockets, knock-out (ejection) holes, fastening holes and their counterbores were machined in CNC milling machines. All these features can be seen on right positioning and support fixture in Figure 6.7

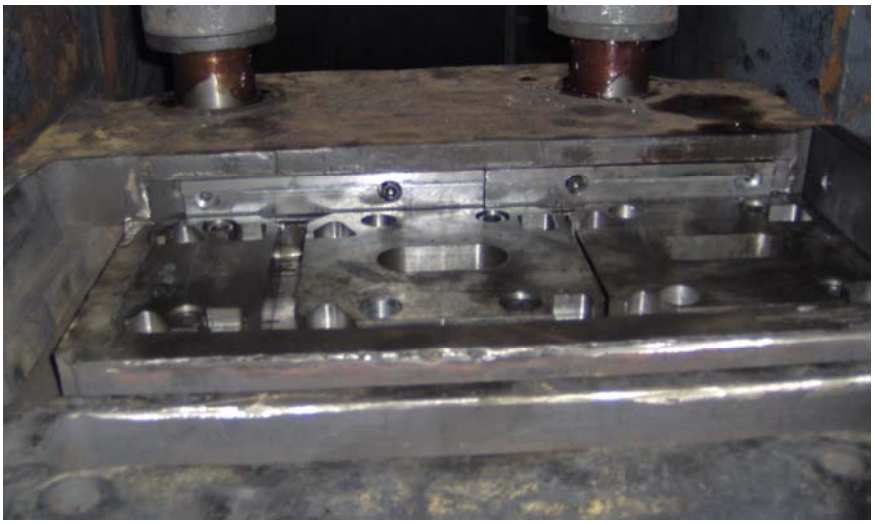

Figure 6.6 Positioning and Support Fixtures of Lower Side

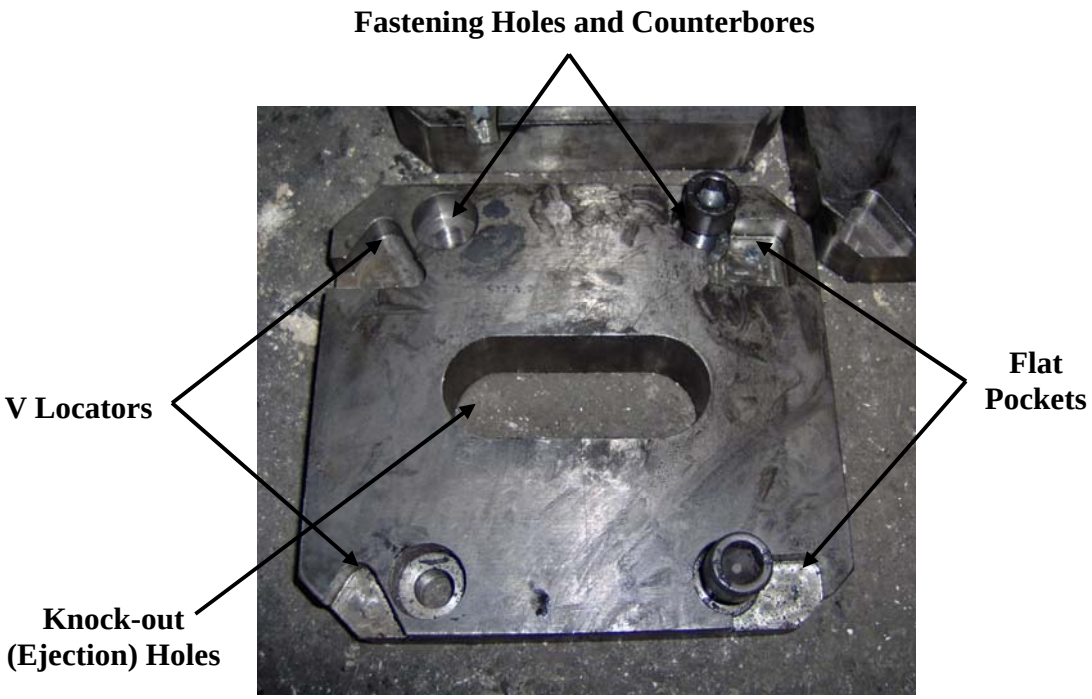

Figure 6.7 Right Positioning and Support Fixture

6.1.4 Manufacturing Processes of Other Supports

Among the modules and elements that constitute the modular die set system, there have been some standard elements apart from the elements designed uniquely for this study. Front and side shoes, back and side supports, positioning pins and standard plates have been some examples of these standard elements. For the tests of the proposed system, the current standard front shoes and side shoes of Aksan Steel Forging Company were used. Back and side supports were not produced either. No new shoes or supports were designed or produced. Figure 6.8 shows some of these standard elements.

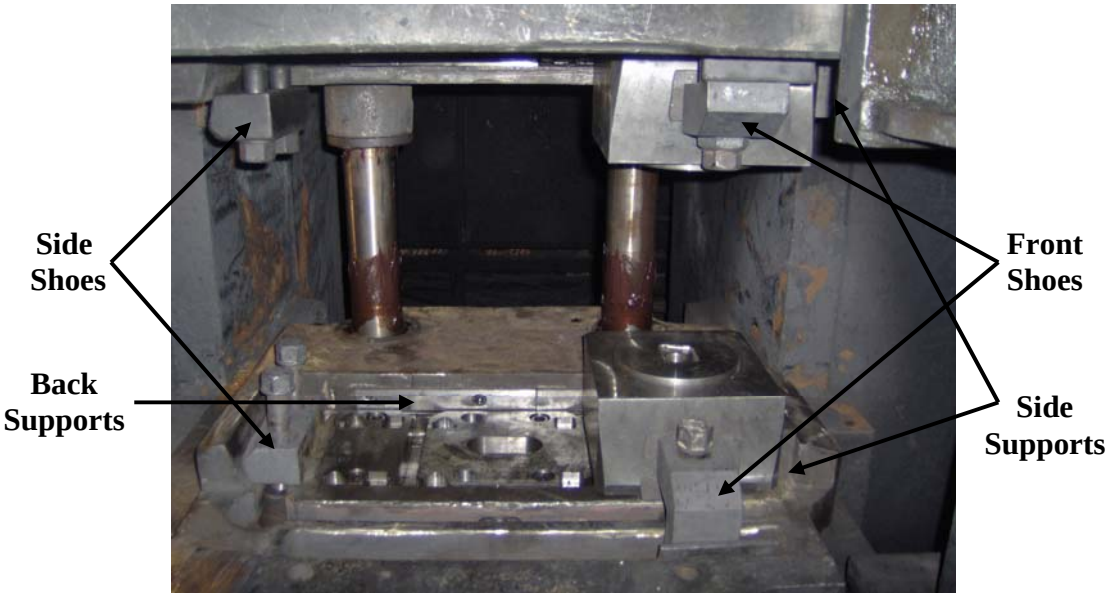

Figure 6.8 Some Standard Elements

As mentioned earlier, exact positioning of the upper and lower die-cassette pairs and bending/lengthening/upsetting/idle dies have been achieved by inserting pins into the pin holes of the cassettes. Each cassette or bending/lengthening/upsetting/idle die have needed 4 pins. Since there have been two cassettes and one idle die on each die holder, 12 pins have been required for each side (i.e. upper or lower). 24 pins have been used during the operation of the press. Pins were produced from 2379 Steels and 2080 Steels in turning machine. They were Ø15 mm in diameter and 25 mm in length.

During revisions, a certain depth of material has been removed from the die surfaces. So the length of the die has been shortened. In order to elevate the dies to previous positions on the press, it is needed to insert the standard plates under the dies. They have been Ø178 mm in diameter, 2 mm in thickness and made from 2714 Steel materials.

The technical drawings of all of the standard elements can be found in Appendices C and D.

The technical drawing of the test part can be found in Appendix F.

6.2 Process Charts

The flow charting of processes of a work is a useful way of recording the essential steps of the work. Process charts are one of the simpler forms of workflow charting. They are easy to follow, easy to work with and they are resulted a great deal of productivity gain. They are the records of subsequent activities. Process charts are useful as presenting much information in condensed form. They are the common "language" between different groups of people.

The aim of process charts is to present information regarding existing and proposed processes in such a simple form that such information can become available to and usable by the greatest possible number of people in an organization before any changes whatever are actually made, so that the special knowledge and suggestions of

those in positions of minor importance can be fully utilized. Process charts shows the planned processes as well as the present process. In many instances, recording industrial processes in process-chart form has resulted astonishing improvements [37].

The different kinds of process chart share a common set of symbols. The common symbols (of which there are only five) were first promulgated by the American Society of Mechanical Engineers and have become known as the ASME symbols [38]. These symbols are given in Table 6.1 with their definitions.

Table 6.1 Symbols of ASME for Process Charts [38]

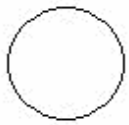	**OPERATION:** a main step, where the part, material or product is usually modified or changed.
	**INSPECTION:** indicates a check for quality or quantity.
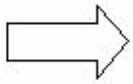	**TRANSPORT:** the movement of workers, materials or equipment.
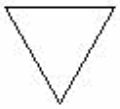	**STORAGE:** controlled storage in which material is received into or issued from a store, or an item is retained for reference purposes.
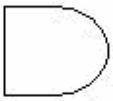	**DELAY or TEMPORARY STORAGE:** indicates a delay in the process, or an object laid aside until required.

For the present die changing operations of Aksan Steel Forging Company, the process charts are given in Appendix G. The current applications for mounting the dies to the cassettes, dismounting the previous die-cassette pairs from the die holders, mounting the new die-cassette pairs to the die holders and dismounting the dies of previous operation lot from the cassettes are given in Tables G.1, G.2, G.3 and G.4 respectively.

For the application with new modular die set system, the flow process charts are presented in Appendix H. The process chart of mounting the dies to the cassettes is given in Table H.1 and the process chart of mounting the die-cassette pairs to the die holders is tabulated in Table H.2. Similarly, Table H.3 indicates the process chart of dismounting the die-cassette pairs from the die holders and Table H.4 presents the process chart of dismounting the dies from the cassettes.

6.3 Activity Charts

Activity charts are listing of activities of one or more subjects (e.g. workers, machines) plotted against a time scale to indicate graphically how much time is spent on each activity [39].

Types of activity charts are right-hand/left-hand activity charts (workplace activity charts), worker-machine activity charts, worker-multimachine activity charts and gang activity charts (multiworker activity charts) [39].

Shading format of activity charts is given in Table 6.2.

For the proposed modular die set system of Aksan Steel Forging Company, a worker-machine activity chart for die changing operations of a worker is supplied in Appendix I, Table I.1. This activity chat involves only the internal setup operations of the proposed system. The time spent for internal setup operations is regarded simply as die changing time. This time is unproductive time since the press is not working during internal setup operations.

Table 6.2 Shading Format of Activity Charts [39]

Shading	Color	Activity
Black	Blue	***Operation***: Performing an operation. Worker operating on or handling material at workplace. Machine performing an operation on automatic or mechanized cycle.
Gray	Yellow	***Inspection***: Worker performing an inspection, to check for either quantity or quality.
White (blank)	White (blank)	***Idle time***: Worker or machine is idle, waiting, or stopped.
Diagonal lines	Green	***Moving***: Worker walking outside immediate workplace (e.g., to fetch tools or materials).
Horizontal lines	Red	***Holding***: Worker holding an object in fixed position without performing any work on it.

6.4 Time Study of the New Modular System

After the manufacture of all modules and procurement of the standard elements, test operations of the proposed system have been carried out on the 1000 ton Stankoimport press of Aksan Steel Forging Company. In the tests, time spent for internal and external die changing operations of the present system and the proposed systems have been measured.

First of all, the dies of the new modular system have been inserted into the cassettes externally as described in Section 4.2.1. Since the planer surfaces of the dies and the cassettes have coincided as explained in Problem 2 of Section 3.2, there is not a possibility of angular misalignment of the dies and the cassettes in vertical axis. All of these operations may be carried out before the last productions of previous lot. The detailed time analysis of mounting the dies to the cassettes are given as process charts in Table G.1 and Table H.1 in Appendices for the present and proposed systems respectively.

Afterwards, the dies and the die-cassette pairs belonging to previous production lot have been dismounted from the press. In order to perform these dismounting operations, the front shoes and the side shoes have been unfastened initially. Then, the die-cassette pairs have been taken away from the upper and lower die holders. Table G.2 and Table H.2 in Appendices include the time analysis for the present and proposed systems respectively.

Thereafter, the new die-cassette pairs have been placed on the positioning and support fixtures, and mounted to die holders as explained in Section 4.2.2. Time studies for these operations are given in Table G.3 and Table H.3 in Appendices for the present and proposed systems respectively.

Finally, the dies have been removed from the cassettes externally after the press is started for the new production lot as given in Table G.4 and Table H.4 in Appendices.

Table 6.3 points out the time spent for mounting operations of the dies to the cassettes, dismounting operations of the previous die-cassette pairs from the die holders, mounting operations of the new die-cassette pairs to the die holders, preheating operations of the dies and dismounting operations of the previous dies from the cassettes for both of the present and proposed systems.

As can be seen from Table 6.3 internal setup operations have taken 220 and 141 minutes by the present and proposed systems respectively. The internal setup times include the time starting with dismounting of the die-cassette pairs of the previous production lot and ending with the production of the first good part of the new lot. As SMED system describes, internal die changing time, which is the time spent during the press is not working, can be regarded as changeover time. The time spent for internal die changing operations (or simply die changing operations) have been reduced from 220 minutes to 141 minutes. If preheating time, which is 60 minute, is also excluded, it may be concluded that the die changing operations have been completed in only 81 minutes by the proposed system.

Table 6.3 Time Spent for Die Changing Cycle of the Present and Proposed Systems

	PRESENT SYSTEM			PROPOSED SYSTEM		
	Internal Setup Time (min)	External Setup Time (min)	Total Time (min)	Internal Setup Time (min)	External Setup Time (min)	Total Time (min)
Mounting Dies into Cassettes	-	29.5	29.5	-	25.5	25.5
Dismounting Die-Cassette Pairs from Die Holders	25	-	25	21	4	25
Mounting Die-Cassette Pairs to Die Holders	135	-	135	60	4	64
Preheating Dies	60	-	60	60	-	60
Dismounting Dies from Cassettes	-	21.5	21.5	-	19	19
TOTAL:	**220**	51	271	**141**	52.5	193.5

In present system, during mounting operations of the die-cassette pairs to the die holders, the operators spent 70 minutes for alignment operations in the tests as given in Table 6.4. That is to say, more than 50 % of the time was spent for alignment operations. The time spent for alignment operations may differ slightly from one mounting to another. In the company, the operators were mounting the die-cassette pairs to the die holders, inspecting misalignments, dismounting the die-cassette pairs from the die holders and remounting the die-cassette pairs to the die holders until achieving the sufficient alignment of upper and lower dies. The operations which were being performed for alignment of the dies on the press have been eliminated in the new approach. With the positioning profiles and pins of the proposed method, there is no need to align the upper and lower dies pairs. The time spent for mounting operations of

die-cassette pairs to die holders have been reduced from 135 minutes to 60 minutes as seen in Table 6.4. Nearly 56 % of reduction is achieved.

Table 6.4 Time Spent During Mounting Die-Cassette Pairs to the Die Holders for the Present and Proposed Systems

	Internal Setup Time for Present Sytem (min.)	Internal Setup Time for Proposed Sytem (min.)
Mounting Operations of Die-Cassette Pairs to Die Holders	65	60
Adjustment Time	70	-
TOTAL:	135	60

Unfortunately there have been no striking time reductions in mounting operations of the dies to the cassettes. The fastening operations of the dies to the cassettes by shoes have been eliminated in the proposed system; however the pins have been inserted under the cassettes in the new method. Time spent for those two operations have practically balanced each other.

The time spent for dismounting of the die-cassette pairs from the die holders, the preheating operations and dismounting operations of the dies from the cassettes cannot be reduced. Almost the same operations have been applied for those steps in both of the present and the proposed systems.

CHAPTER 7

DISCUSSION AND CONCLUSION

7.1 Discussion and Conclusion

In hot steel forging process, one of the important steps that affect product cost directly is the die setup. During die setup operations on the forging press, the press is kept idle. To keep the time spent for die changing operations at minimum level, is challenge for forging companies.

In this study, a modular die system which reduces idle time of the forging press has been designed, produced and tested. The die changing and adjustment operations with the proposed modular die system have been much simpler, much quicker and more systematic than the old changeover methods of Aksan Steel Forging Company.

The current problems encountered during die changing operations in Aksan Steel Forging Company were described in Sections 3.1 and 3.2. To overcome these problems, solutions given in Section 3.2 have been proposed.

In this thesis, applicability of SMED System to 1000 ton forging press has been studied.

Applicability of quick die locating methods to forging press has also been studied. V Locators and Flat Pocket Method has been used.

Marking applications have been introduced in order to eliminate operator mistakes during mounting. The new modular system has such a mounting method that reduces the possibility of operators' faults to minimum level.

The internal die changing times, which are the unproductive times of the press, were generally 3.5 hours (210 minutes) by the old system of Aksan Steel Forging Company. In the time study for the particular case, the total time spent for internal die changing operations was 220 minutes by the system of the company as Table 6.3 indicates. It has been reduced to 141 minutes by the new system. A saving of 79 minutes has been obtained. Therefore the reduction is 36 %.

Preheating of the dies is also performed internally in the company. The internal die changing operations excluding preheating has been completed in only 81 minutes by the proposed system.

The time spent for alignment of the upper and lower dies on the press which is 70 minutes by the system of the company has been eliminated in the proposed system. This has been achieved by machining positioning features on the dies and using reference pins to locate the cassettes on the positioning and support fixtures. The internal setup time of mounting die-cassette pairs to die holders is also reduced 5 minutes. Therefore the time spent for internal setup operations of mounting die-cassette pairs to die holders have been reduced from 135 minutes to 60 minutes and the reduction is 56 %.

The application of revision has been renewed. After each revision, insertion of standard plates under the dies has been suggested. It has been proposed to machine reference pockets on the die surfaces in order to use the same CNC code in milling machines and the same electrodes in EDM machines. With these reference pockets, the die cavities have been machined more accurately, therefore precision of the forging part has been improved.

A second alternative dimension set is also designed for the forging operations requiring two performing operations and one finishing operation.

Functional clamps have been studied; however they have not been used during mounting die-cassette pairs to die holders because of excessive loads in hot forging applications.

7.2 Recommendations for Future Work

There are some recommendations for future work of this study:

- More observations can be carried out with different part geometries in order to observe the improvement more definitely.
- The system can be adapted to other presses of the company with 1600 ton and 4000 ton capacities, if the dimensions of the modules are rearranged and adapted to the particular presses.
- A system, in which the upper and lower die-cassette pairs are mounted/dismounted to/from the die holders as external setup operations, can be studied.
- The clamping methods of mounting/dismounting the die-cassette pairs to the die holders can be improved. Quicker clamping methods can be used during fastening/unfastening the die-cassette pairs to the die holders.
- After the dies are mounted to the presses, they are preheated up to 150 - 200 °C on the press. Some studies can be carried out for heating dies before the mounting operation to reduce the nonproductive time.
- Experimental study can be performed for measuring the loads on the modules of the system.
- The methodology suggested by 5S System should be applied in all production areas of Aksan Steel Forging Company.
- In order to optimize the wall thicknesses of the dies and the cassettes, finite element analysis of the system can be studied.

REFERENCES

[1] DeGarmo E. P., Black J. T., Kohser R.A., "Materials and Processes in Manufacturing", Prentice-Hall International Inc., New York, 1997

[2] Sharman J. C., "Drop, Press and Machine Forging" the Machinery Publicating, England

[3] Saraç S., "Design and Thermo-Mechanical Analysis of Warm Forging Process and Dies", M. S. Thesis, Middle East Technical University, Ankara, 2007

[4] Forging Industry Association, web site: "http://www.forging.org", Last Accessed: 15 May 2008

[5] Forging Design Handbook, American Society for Metals, Ohio-USA, 1972

[6] Altan T., Boulger, F, W., Becker, J, R., Akgerman, N., Henning, H, J., Forging Equipment, Materials and Practices, Batelle Columbus Laboratories Metalworking Division, Ohio, 1973

[7] Kalpakjian S., "Manufacturing Processes for Engineering Materials", Addison Wesley Longman Inc, 3rd Edition, California, 1997

[8] Personal contacts with Aksan Steel Forging Company

[9] Maşat, M. "Design and Implementation of Hot Precision Forging Die for a Spur Gear", M. S. Thesis, Middle East Technical University, Ankara, Turkey, 2007

[10] Bayar F. M., "Design and Analysis of Fixturing in Assembly of Sheet Metal Components of Helicopters" M.S. Thesis, Middle East Technical University, Ankara, Turkey, 2007

[11] Abachi S., "Wear Analysis of Hot Forging Dies", M.S. Thesis, Middle East Technical University, Ankara, Turkey, 2004

[12] Civelekoğlu B., "Analysis of Forging for Three Different Alloy Steels", M.S. Thesis, Middle East Technical University, Ankara, Turkey, 2003

[13] Gülbahar S., "Preform Design for Heavy Vehicle Steering Joint", M.S. Thesis, Middle East Technical University, Ankara, Turkey, 2004

[14] Karagözler A. B., “Analysis and Preform Design for Long Press Forgings with Non-Planar Parting Surfaces”, M.S. Thesis, Middle East Technical University, Ankara, Turkey, 2003

[15] Ceran M., “Finite Element Analysis of Hot Upset Forging Dies”, M.S. Thesis, Middle East Technical University, Ankara, Turkey, 2002

[16] Kutlu A. E., “Analysis and Design of Preforms for Non-Axisymmetric Press”, M. S. Thesis, Middle East Technical University, Ankara, 2001

[17] Gökler M.İ., “Computer Aided Sequence and Die Design for Hot Upset Forgings”, Ph.D. Thesis, University of Birmingham, England, 1983

[18] Smith D. A., “Quick Die Change”, Society of Manufacturing Engineers, Dearborn Michigan, 1991

[19] Sekine K., Arai K., “Kaizen for Quick Changeover”, Productivity Inc. Portland, Oregon, 1992

[20] Shingo S., “Non-Stock Production the Shingo System for Continuous Improvement” Productivity Press, Cambridge, MA, 1988

[21] Steudel H.J., ve Desruelle P., “How to Become a Mean, Lean” World-Class Competitor, 1991

[22] Shingo S.,”A Revolution in Manufacturing: The SMED System”, Productivity Press, Portland, Oregon, 1985

[23] Shingo S., “Quick Changeover for Operators: The SMED System”, Productivity Inc. Portland, Oregon, 1996

[24] Kumar A.S. Fuh J.Y.H., Kow T.S., “An Automated Design and Assembly of Inference-free Modular Fixture Setup Computer-Aided Design” Vol 32, pp. 583-596, 2000

[25] Wu Y., Rong Y., Ma W., ReClair S.R., “Automated Fixture Planning: Geometrical Analysis, Robotics and Computer Integrated Manufacturing” Vol 14, pp.1-15, 1998

[26] Prasad B., “A Structured Methodology to Implement Judiciously the Right JIT Tactics, Production Planning and Control 6” pp.564-577, 1995

[27] Womack J.P., Jones D.T., Roos D., “The Machine That Changed the World”, Rawson Associates, New York, 1990

[28] Kusiak A., He D.W., “Design for Agility: A Scheduling Perspective, Robotics and Computer Integrated Manufacturing 14”, pp. 415-427, 1998

[29] McIntosh R.I., Culley S.J., Mileham A.R., Owen G.W., “Changeover improvement: A maintenance perspective”, Int. J. Production Economics Vol 73, pp. 153-163, 2001

[30] Tolhurst G., “SMED Lives In The Factory And Beyond”, Success Through Knowledge, Lean Advisors Inc. (LEAD), 2005

[31] Fernihough A, Culley SJ, Mileham AR. “A Financial Model for Setup Reduction Justification”, Proceedings of the Fourth International FAIM Conference, Blacksburg, VA, pp. 198–207, 1994

[32] Roberto O. A., Fely S., “Single-Minute Exchange of Die”, IEEE/SEMI Advanced Semiconductor Manufacturing Conference, 1996

[33] Suzaki K., “Üretim İşletmelerinde Modern Yönetim”, Çeviren: Dr. S. İzgiz, 1994.

[34] U. S. Environmental Protection Agency, web site: “http://www.epa.gov/lean/ thinking/fives.htm” Last Accessed: October 2008

[35] 5S: Workplace Organisation and Standardization, web site: “http://www.5ssystem. info/” Last Accessed: 16 October 2008

[36] Manufacturing-trends, web site “http://www.manufacturing-trends.com/5s_system. html” Last Accessed: 16 October 2008

[37] Gilbreth F. B., Gilbreth L. M., “Process Charts” American Society of Mechanical Engineers, New York, 1921

[38] The Saudi Network, Process Charts web site “http://www.thesaudi.net/kg/tools/ processcharts.htm”, Last Accessed: 17 October 2008

[39] Groover M.P., “Work Systems and the Methods, Measurement, and Management of Work”, Pearson Education, Inc., Upper Saddle River, NJ, 2007

[40] KB8040-00-001 Model, 1000 Ton Stankoimport Press Manual

APPENDIX A

CHECKLIST FOR DIE CHANGING

Table A.1 Checklist for Die Changing [19]

	Check Item	
Die	1	Is the die in the correct place?
	2	Has each die part been fully checked?
	3	Is the die really clean?
	4	Is the die scratched or otherwise damaged?
Measure-ment tools	1	Are there any micrometer gauges in supply?
	2	Are there any calipers?
	3	Are there tube gauges?
	4	Is there a magnifying glass?
	5	Are there any dial gauges?
	6	Are all of the inspection tools present?
	7	Are there measurement jigs?
	8	Has everything been kept in good repair?
	9	Are the measurement tools all in their correct places?
Tools	1	Are there any wrenches?
	2	Are there screwdrivers?
	3	Are there tweezers?
	4	Are there any clean rags?
	5	Are there any level gauges?
	6	Are there brushes?
	7	Are all of the tools in their correct places?
Other	1	Are all the required materials present?
	2	Has the thickness of materials been checked?
	3	Are all the process workpieces present?
	4	Is there a standard operations chart?
	5	Is there an inspection data sheet?
	6	Are there any projection diagrams?
	7	Are all of the required parts bins there?
	8	Are there carts?
	9	Are there sampling forms?
	10	Is the lighting good?

APPENDIX B

THECNICAL DATA OF 1000 TON STANKOIMPORT PRESS IN AKSAN STEEL FORGING COMPANY

Brand: Stankoimport (Russian)
Model: KB8040-00-001
Production Year: 1991
Serial No: 46

Basic parameters and dimensions corresponding to the data are given in Table B.1

Table B.1 Basic Parameters and Dimensions of 1000 Ton Stankoimport Press [40]

	Parameter or Dimension	Value	Unit
1	Rated Force of Press	10000	kN
2	Slide Stroke	250 ± 0.6	mm
3	Number of Strokes at Continious Run	90	1/min
4	Minimum Distance Between the Anvil and the Ram at Bottom Dead Center	560 ± 0.6	mm
5	Adjustment of Distance Between Bed and Slide	20	mm
6	Upper Knock-out: Stroke Force	 40 ± 3 31.5	 mm kN
7	Lower Knock-out: Stroke Force	 20 ± 2 50	 mm kN
8	Dimensions of Bed: Left-to-Right Front-to-Back	 885 1080	 mm mm
9	Dimensions of Slide: Left-to-Right Front-to-Back	 720 720	 mm mm
10	Overall Dimensions of Press: Left-to-Right Front-to-Back	 4730 ± 40 3500 ± 35	 mm mm
11	Height of Press Above Floor Level	5145 ± 50	mm
12	Mass of Press	65700	kg
13	Number of Single Slide Strokes per Minute	18	1/min

Characteristics of electrical equipment are given in Table B.2

Table B.2 Characteristics of Electrical Equipment of 1000 Ton Stankoimport Press [40]

	Description	Data	Unit
1	Number of Electric Motors on Press	3	pcs
2	Main Drive Motor: Type Rating Speed	 4AHK250M8 55 750	 kW rpm
3	Shut Height Adjustment Mechanism Motor: Type Rating Speed	 4AA100L6Y3 2.2 100	 kW rpm
4	Grease Lubrication Station Motor: Type Rating Speed	 4AAM63B4Y3 0.37 1500	 kW rpm
5	Total Rating of All Elecrtic Motors	57.57	kW

APPENDIX C

THE OUTER DIMENSONS OF THE PRODUCTS OF AKSAN STEEL FORGING COMPANY

Table C.1 The Outer Dimensions of the Products Forged by 1000 Ton Press During 2006 and 2007 in Aksan Steel Forging Company

	Press Code	Diameter, Ø (mm)	Height, z (mm)	Width, x (mm)	Length, y (mm)
1	1000 TON	86	79		
2	1000 TON		18	60	124
3	1000 TON		26	40	40
4	1000 TON		14	30	70
5	1000 TON	179	18		
6	1000 TON		12	53	96
7	1000 TON		48	123	146
8	1000 TON		19	76	111
9	1000 TON		58	166	39
10	1000 TON	51	132		
11	1000 TON		24	44	83
12	1000 TON		35	113	90
13	1000 TON	43	194		
14	1000 TON		20	40	106
15	1000 TON		103	65	124
16	1000 TON	45	199		
17	1000 TON	46	22		
18	1000 TON		36	50	200
19	1000 TON		36	36	161
20	1000 TON		12	190	31
21	1000 TON		28	38	132
22	1000 TON	90	34		
23	1000 TON		36	28	138

Table C.1 The Outer Dimensions of the Products Forged with 1000 Ton Press During 2006 and 2007 in Aksan Steel Forging Company (Continued)

	Press Code	Diameter, Ø (mm)	Height, z (mm)	Width, x (mm)	Length, y (mm)
24	1000 TON		38	84	167
25	1000 TON		40	28	117
26	1000 TON		32	65	63
27	1000 TON	84	58		
28	1000 TON		46	26	118
29	1000 TON		52	140	58
30	1000 TON		24	45	48
31	1000 TON		52	140	58
32	1000 TON		48	76	42
33	1000 TON		30	56	55
34	1000 TON		24	40	38
35	1000 TON		42	119	55
36	1000 TON		36	83	86
37	1000 TON		17	92	106
38	1000 TON		12	26	108
39	1000 TON		30	51	55
40	1000 TON	61	22		
41	1000 TON		25	80	75
42	1000 TON		20	105	123
43	1000 TON	116	15		
44	1000 TON		15	30	140
45	1000 TON		25	44	44
46	1000 TON	127	38		
47	1000 TON	75	132		
48	1000 TON		10	56	115
49	1000 TON		35	66	94
50	1000 TON		30	76	54
51	1000 TON	100	26		
52	1000 TON		12	43	95
53	1000 TON		28	76	153
54	1000 TON		15	85	152
55	1000 TON		26	50	80

Table C.1 The Outer Dimensions of the Products Forged with 1000 Ton Press During 2006 and 2007 in Aksan Steel Forging Company (Continued)

	Press Code	Diameter, Ø (mm)	Height, z (mm)	Width, x (mm)	Length, y (mm)
56	1000 TON		30	90	95
57	1000 TON		25	45	65
58	1000 TON		20	51	36
59	1000 TON		28	180	60
60	1000 TON		12	19	29
61	1000 TON		20	37	247
62	1000 TON	83	41		
63	1000 TON		35	87	64
64	1000 TON	105	44		
65	1000 TON	85	81		
66	1000 TON	108	22		
67	1000 TON		31	20	27
68	1000 TON		20	50	72
69	1000 TON	60	95		
70	1000 TON	38	65		
71	1000 TON		55	90	125
72	1000 TON		40	105	72
73	1000 TON		42	131	90
74	1000 TON	92	42		
75	1000 TON		34	82	83
76	1000 TON		34	70	68
77	1000 TON		47	41	120
78	1000 TON	138	34		
79	1000 TON		65	109	108
80	1000 TON		64	100	47
81	1000 TON		12	53	96
82	1000 TON		19	76	111
83	1000 TON		48	76	42
84	1000 TON	189	18		
85	1000 TON	61	13		

Table C.1 The Outer Dimensions of the Products Forged with 1000 Ton Press During 2006 and 2007 in Aksan Steel Forging Company (Continued)

	Press Code	Diameter, Ø (mm)	Height, z (mm)	Width, x (mm)	Length, y (mm)
86	1000 TON		24	40	60
87	1000 TON		44	51	103
88	1000 TON		21	45	106
89	1000 TON		18	37	91
90	1000 TON		13	26	61
91	1000 TON	83	66		
92	1000 TON		40	50	140
93	1000 TON		14	30	70
94	1000 TON		37	36	340
95	1000 TON		28	74	105
96	1000 TON		32	70	114
97	1000 TON		45	100	108
98	1000 TON		32	60	64
99	1000 TON		48	36	76
100	1000 TON		48	36	76
101	1000 TON		47	65	147
102	1000 TON		64	100	47

APPENDIX D

TECHNICAL DRAWINGS OF THE MODULES BELONGING TO THE FIRST ALTERNATIVE DIMENSIOANAL SET

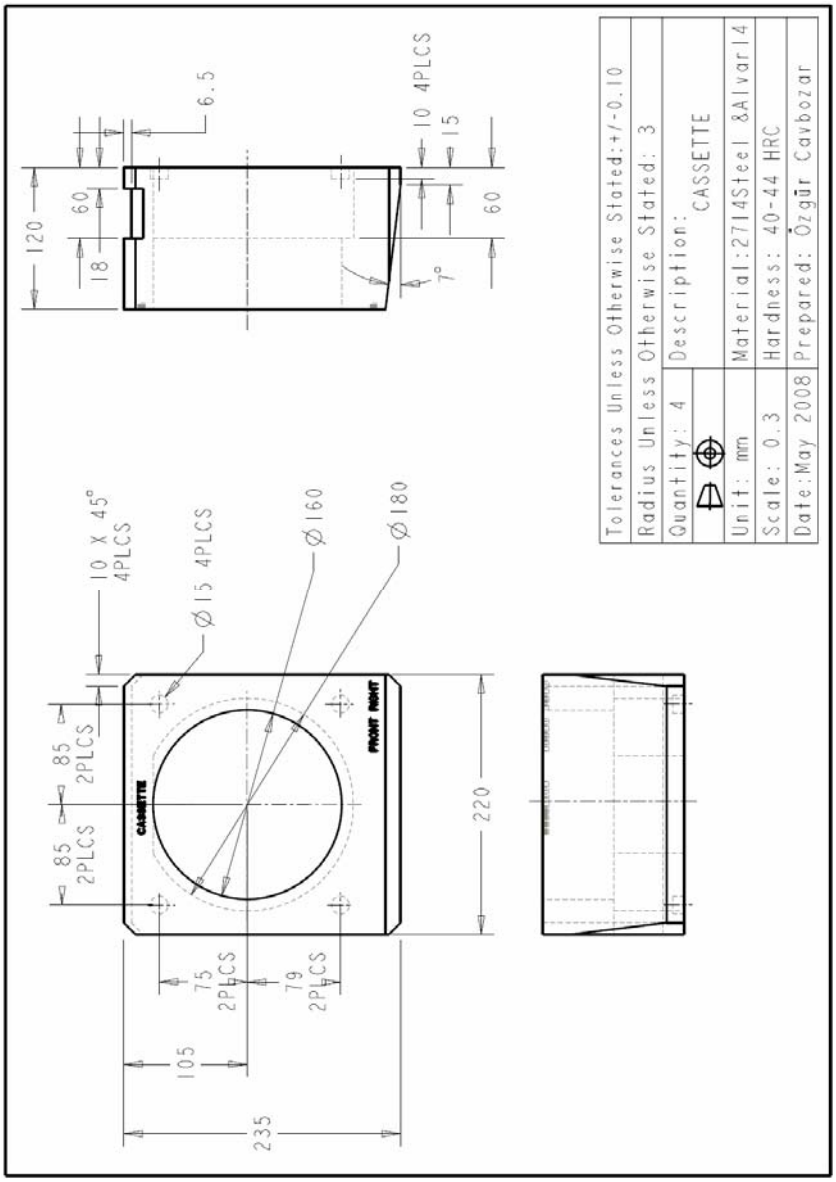

Figure D.1 Technical Drawing of Cassette of the First Alternative Dimensional Set

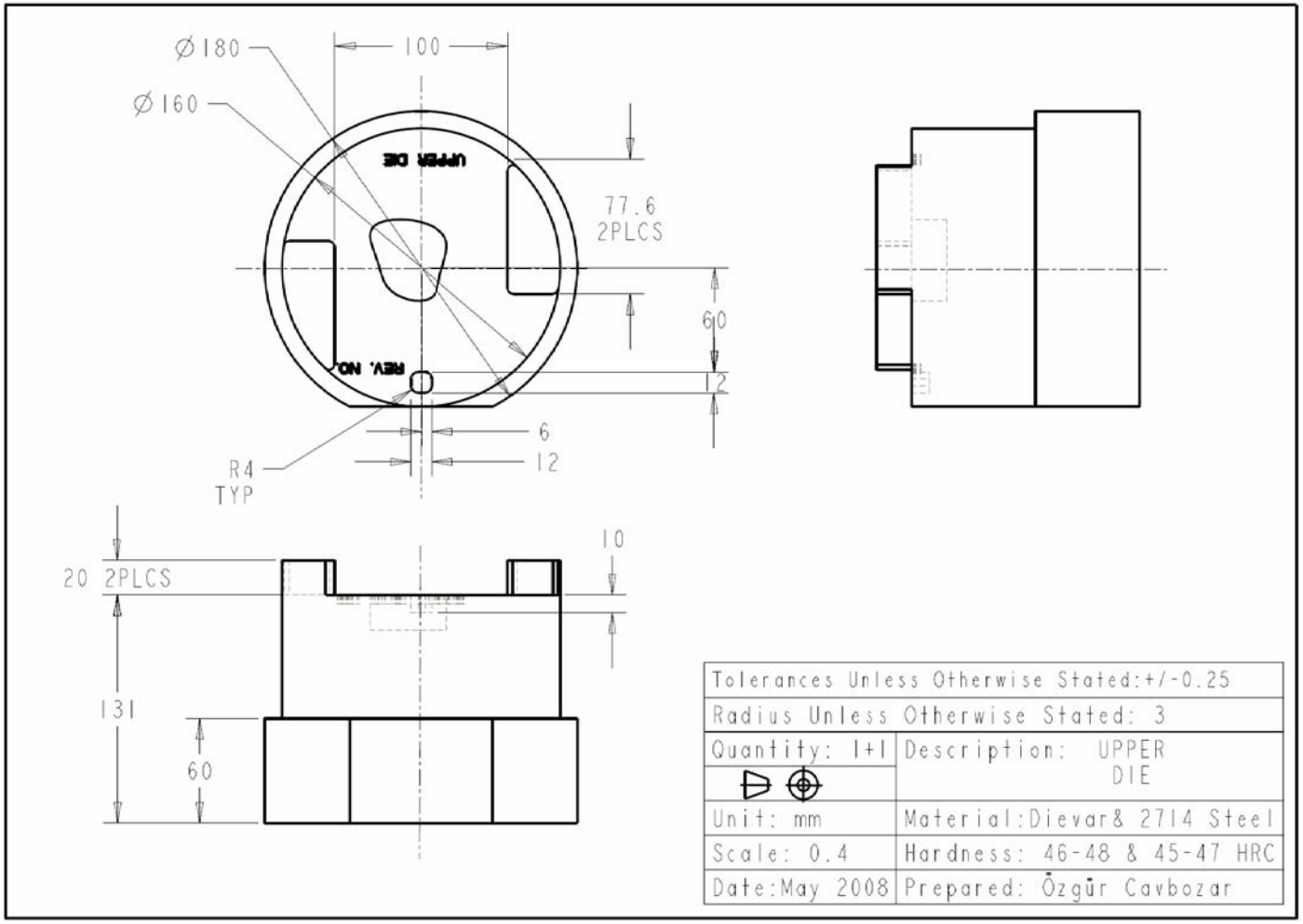

Figure D.2 Technical Drawing of Upper Die of the First Alternative Dimensional Set

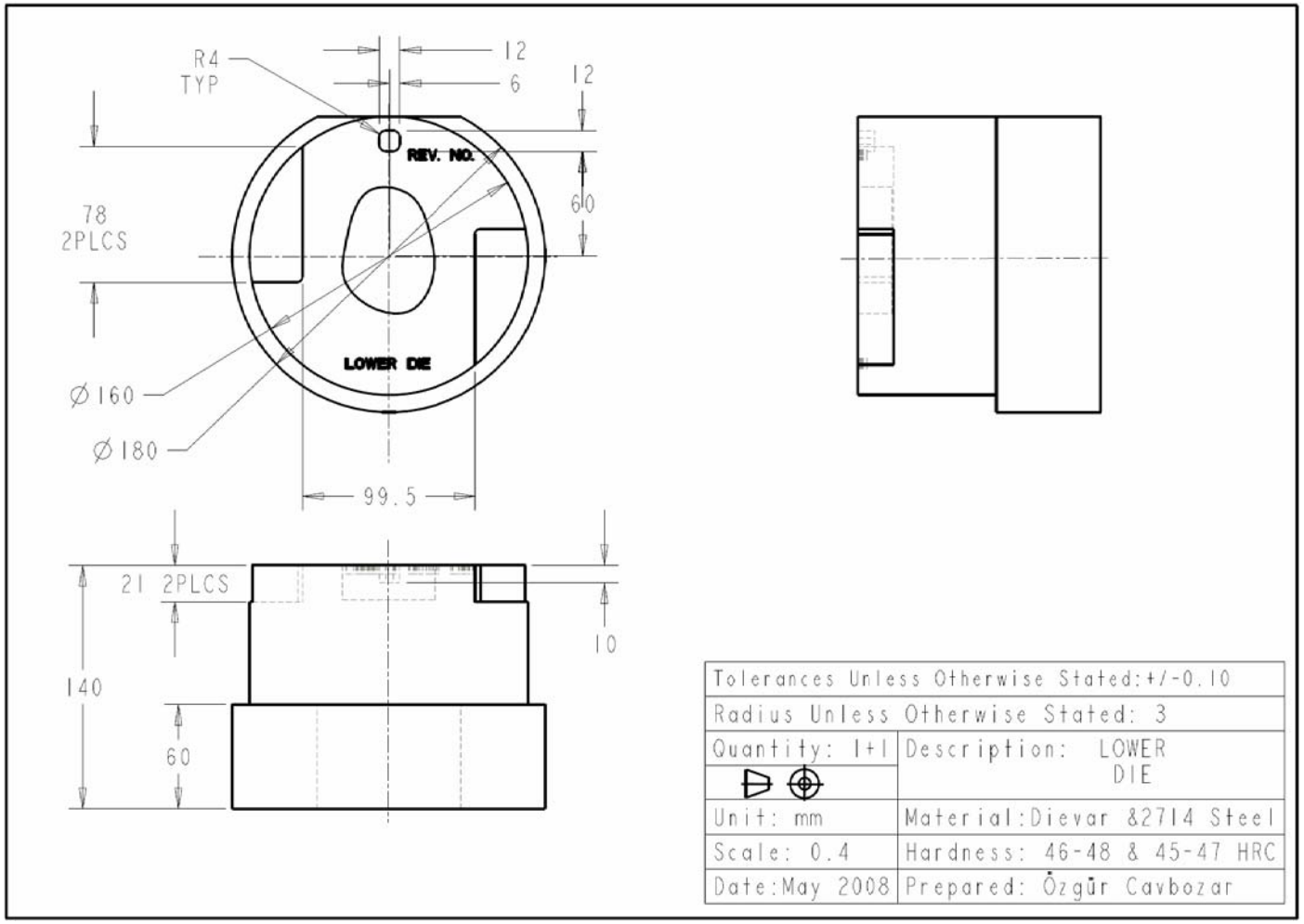

Figure D.3 Technical Drawing of Lower Die of the First Alternative Dimensional Set

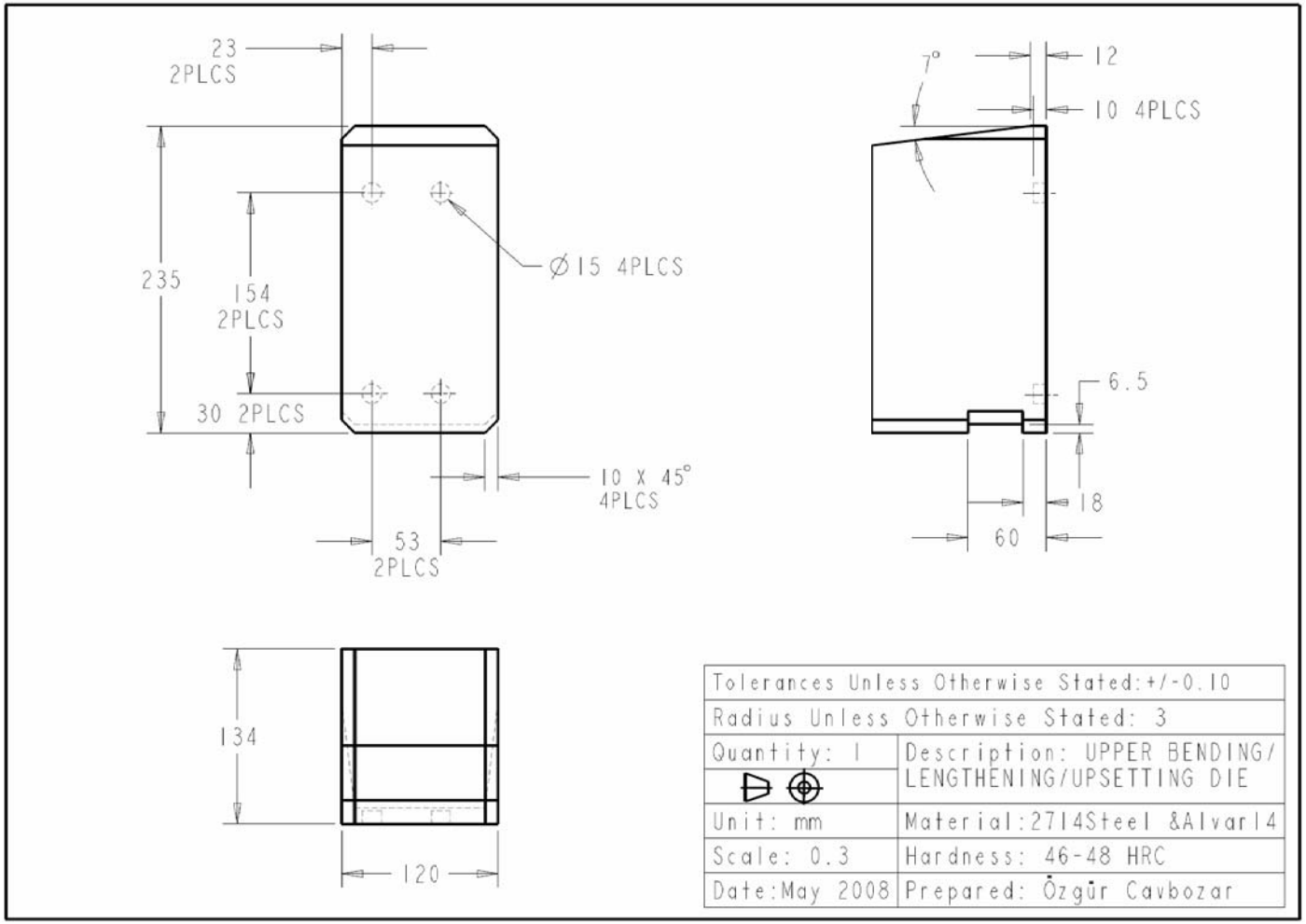

Figure D.4 Technical Drawing of Upper Bending/Lengthening/Upsetting/Idle Die of the First Alternative Dimensional Set

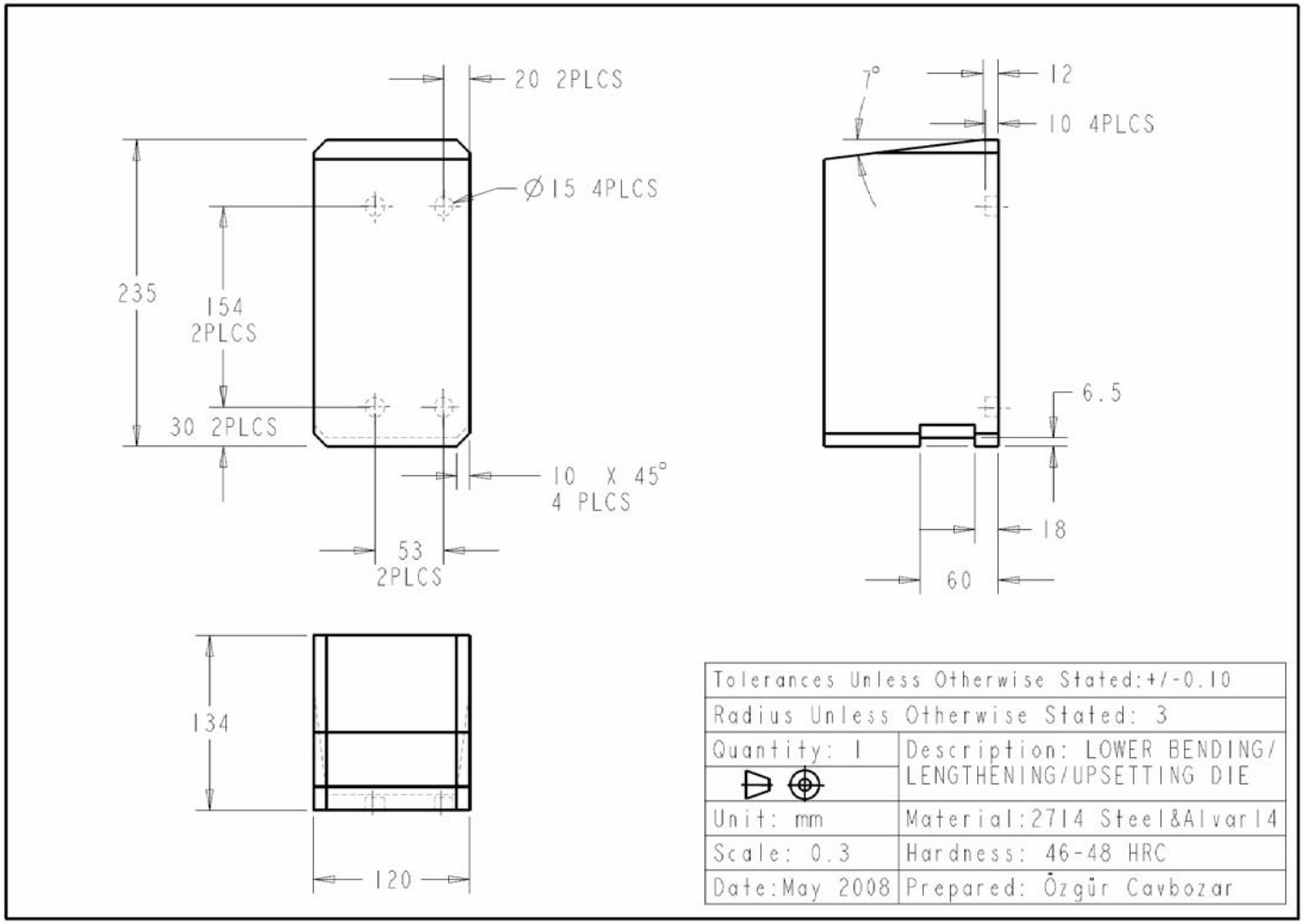

Figure D.5 Technical Drawing of Lower Bending/Lengthening/Upsetting/Idle Die of the First Alternative Dimensional Set

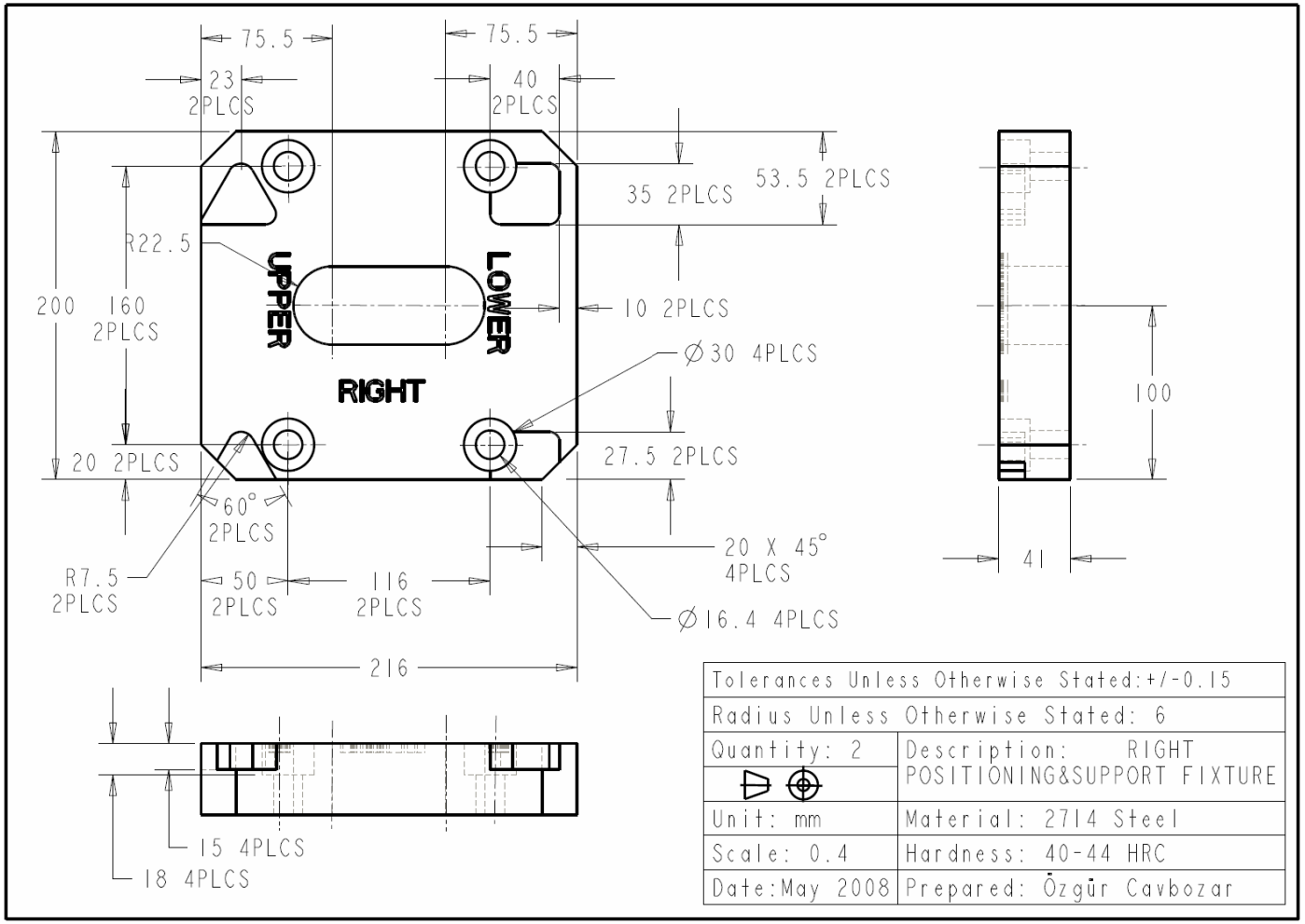

Figure D.6 Technical Drawing of Right Positioning & Support Fixture of the First Alternative Dimensional Set

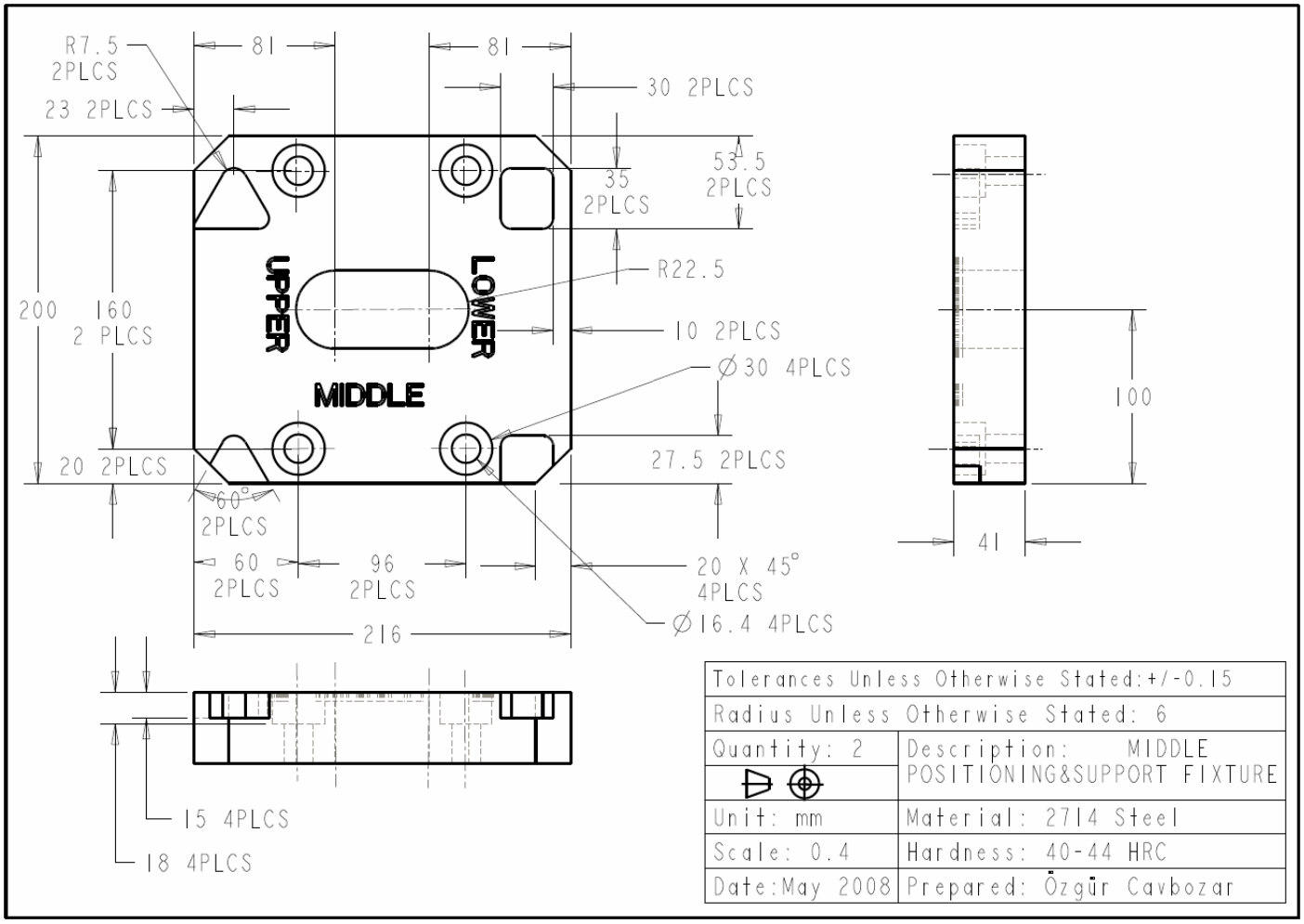

Figure D.7 Technical Drawing of Middle Positioning & Support Fixture of the First Alternative Dimensional Set

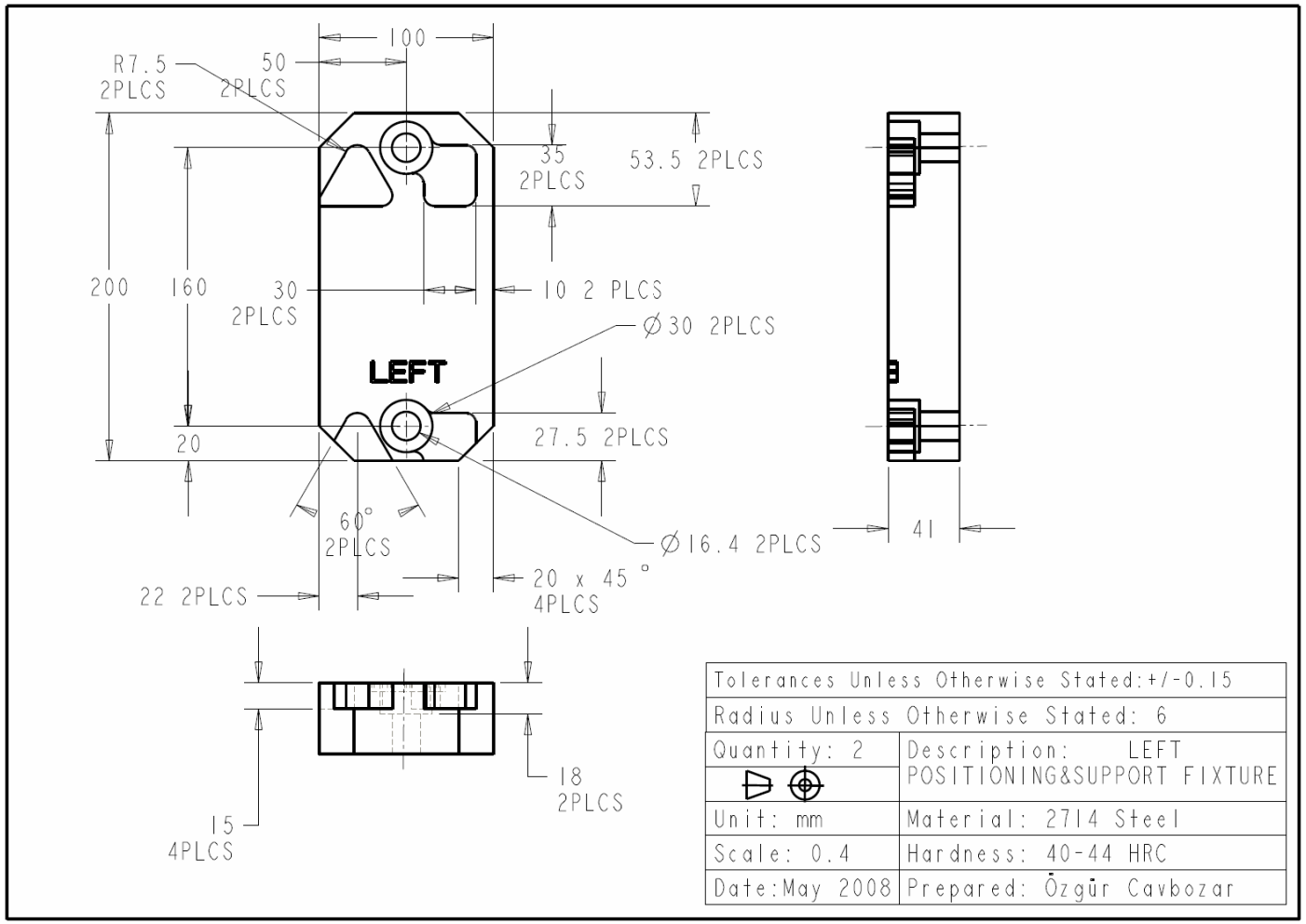

Figure D.8 Technical Drawing of Left Positioning & Support Fixture of the First Alternative Dimensional Set

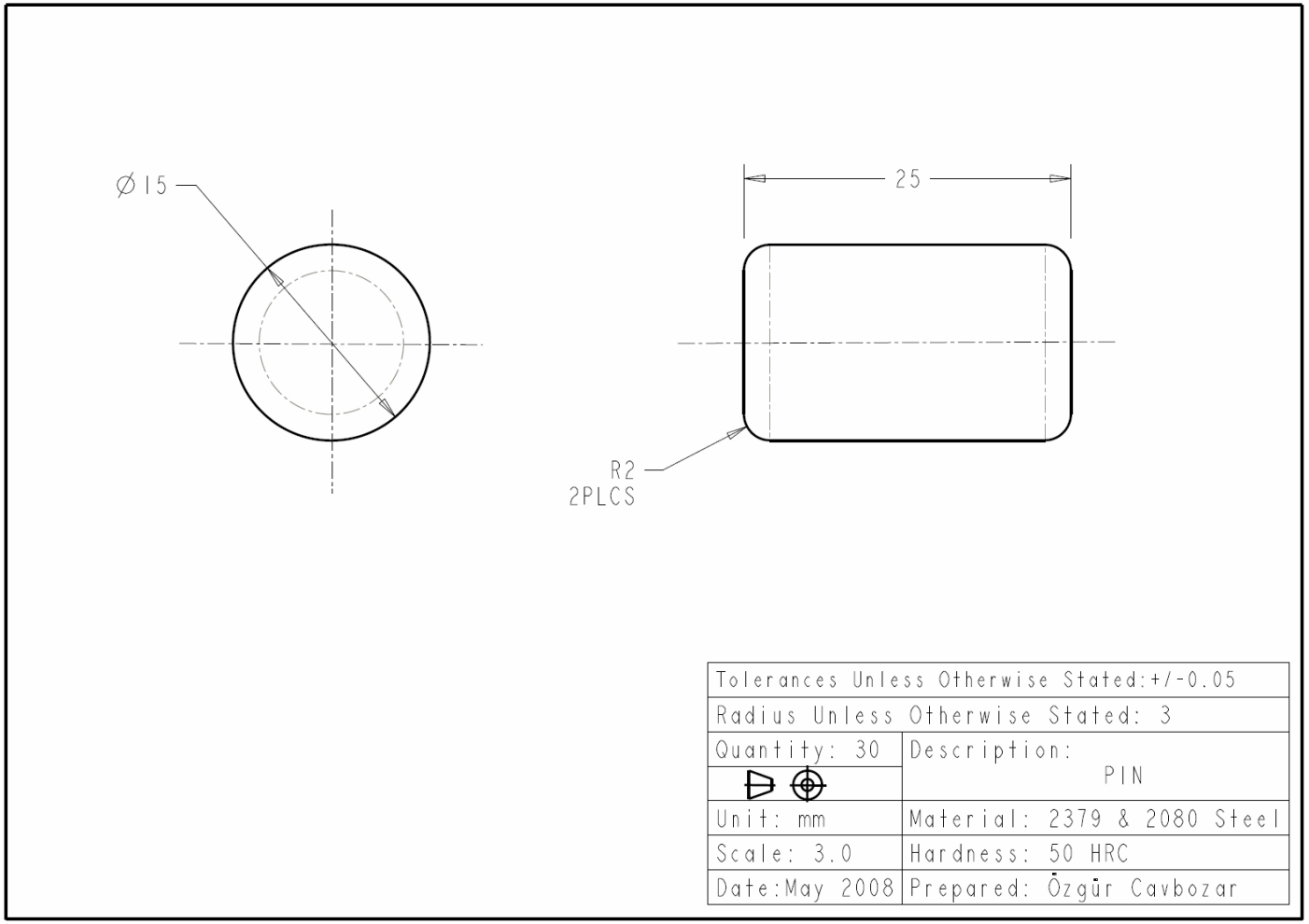

Figure D.9 Technical Drawing of Pins of the First Alternative Dimensional Set

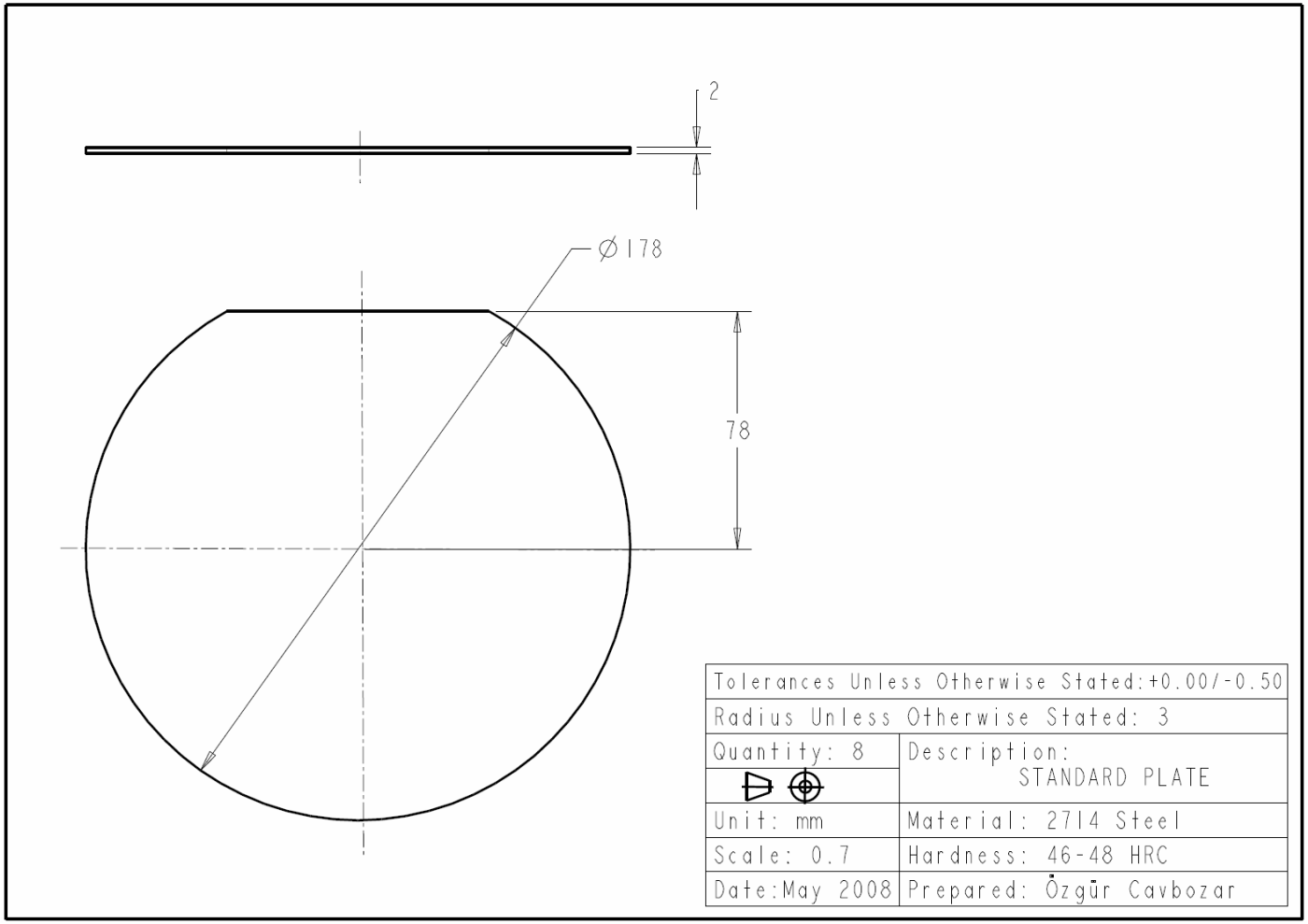

Figure D.10 Technical Drawing of Standard Plates of the First Alternative Dimensional Set

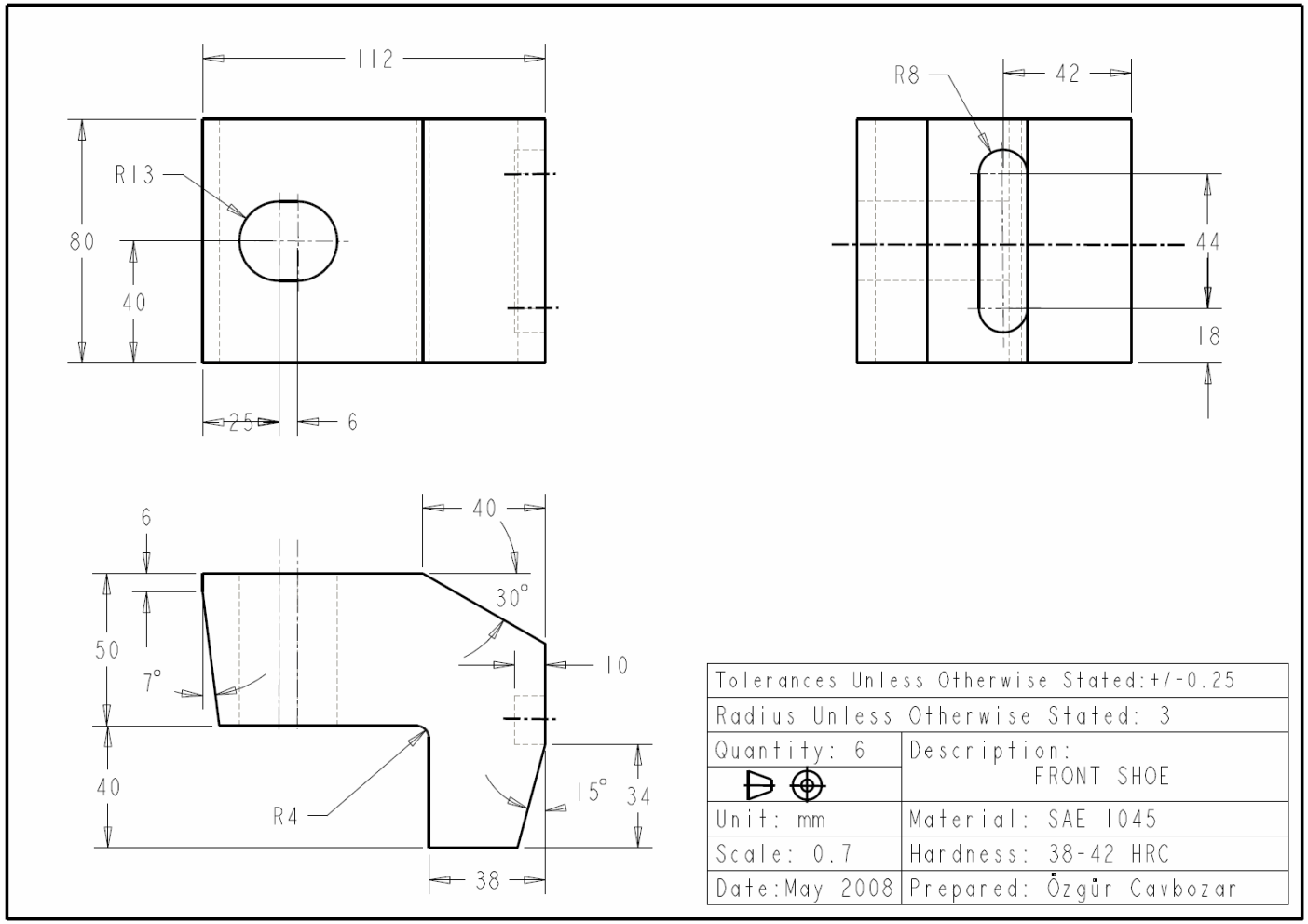

Figure D.11 Technical Drawing of Front Shoes of the First Alternative Dimensional Set

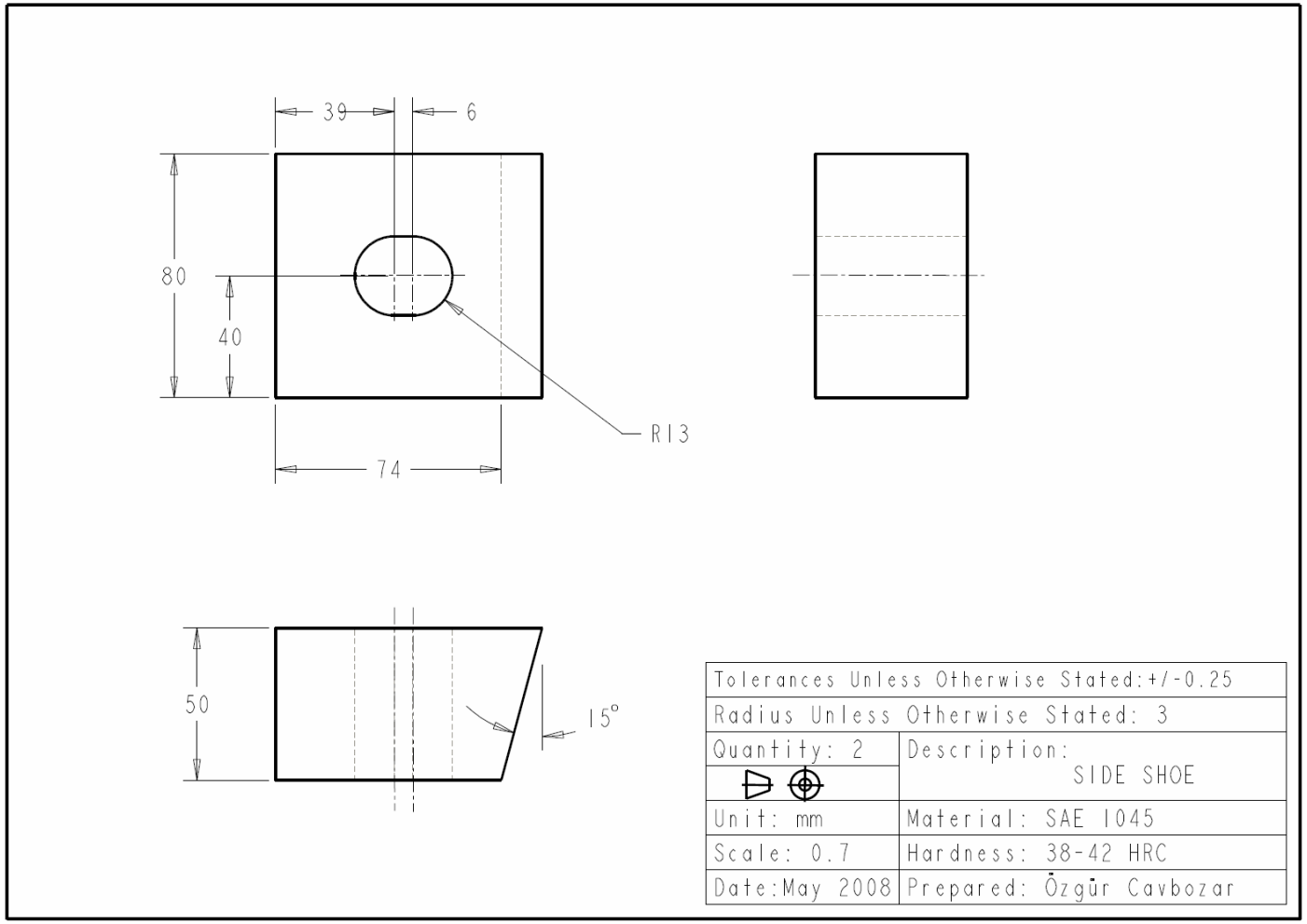

Figure D.12 Technical Drawing of Side Shoes of the First Alternative Dimensional Set

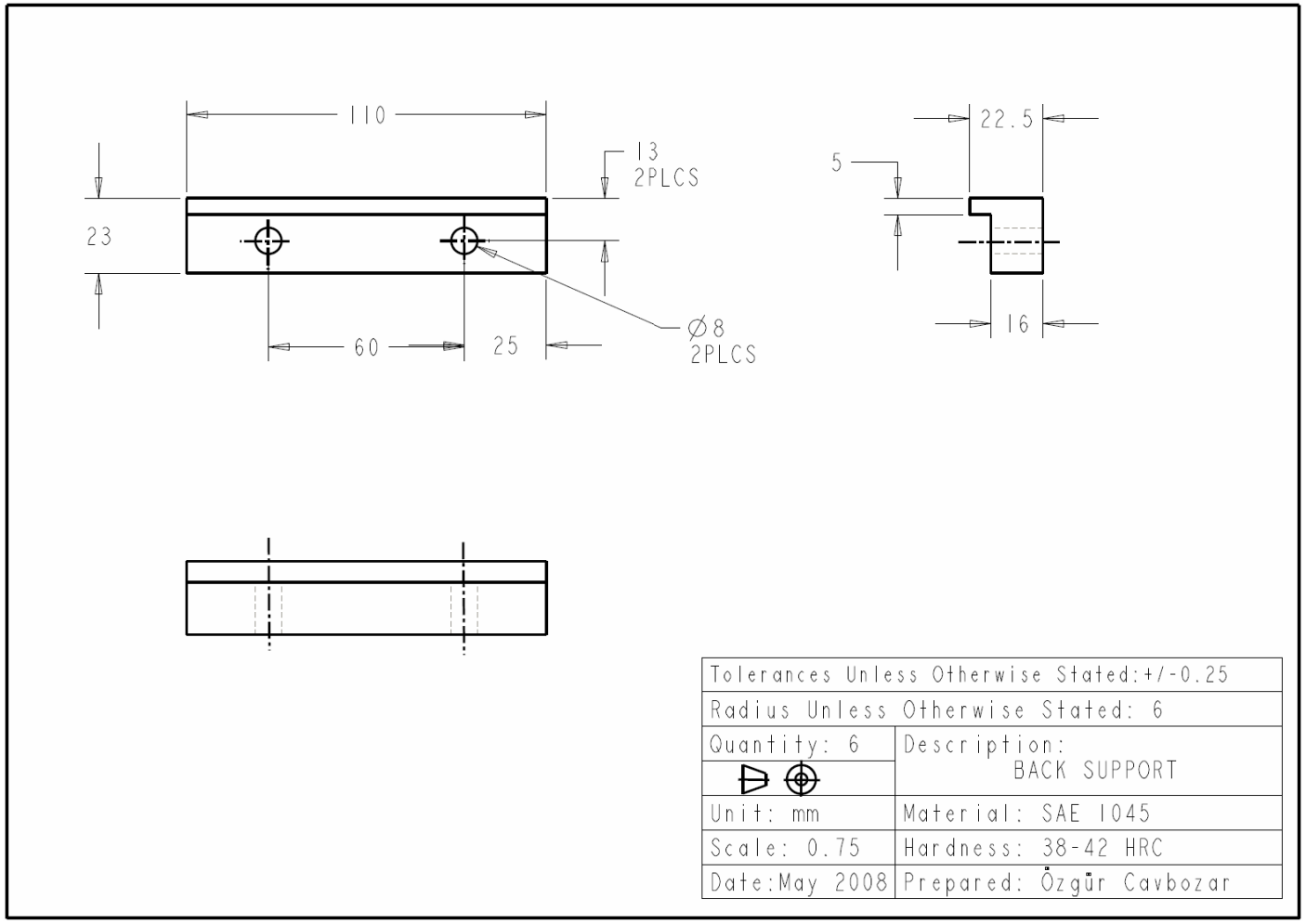

Figure D.13 Technical Drawing of Back Supports of the First Alternative Dimensional Set

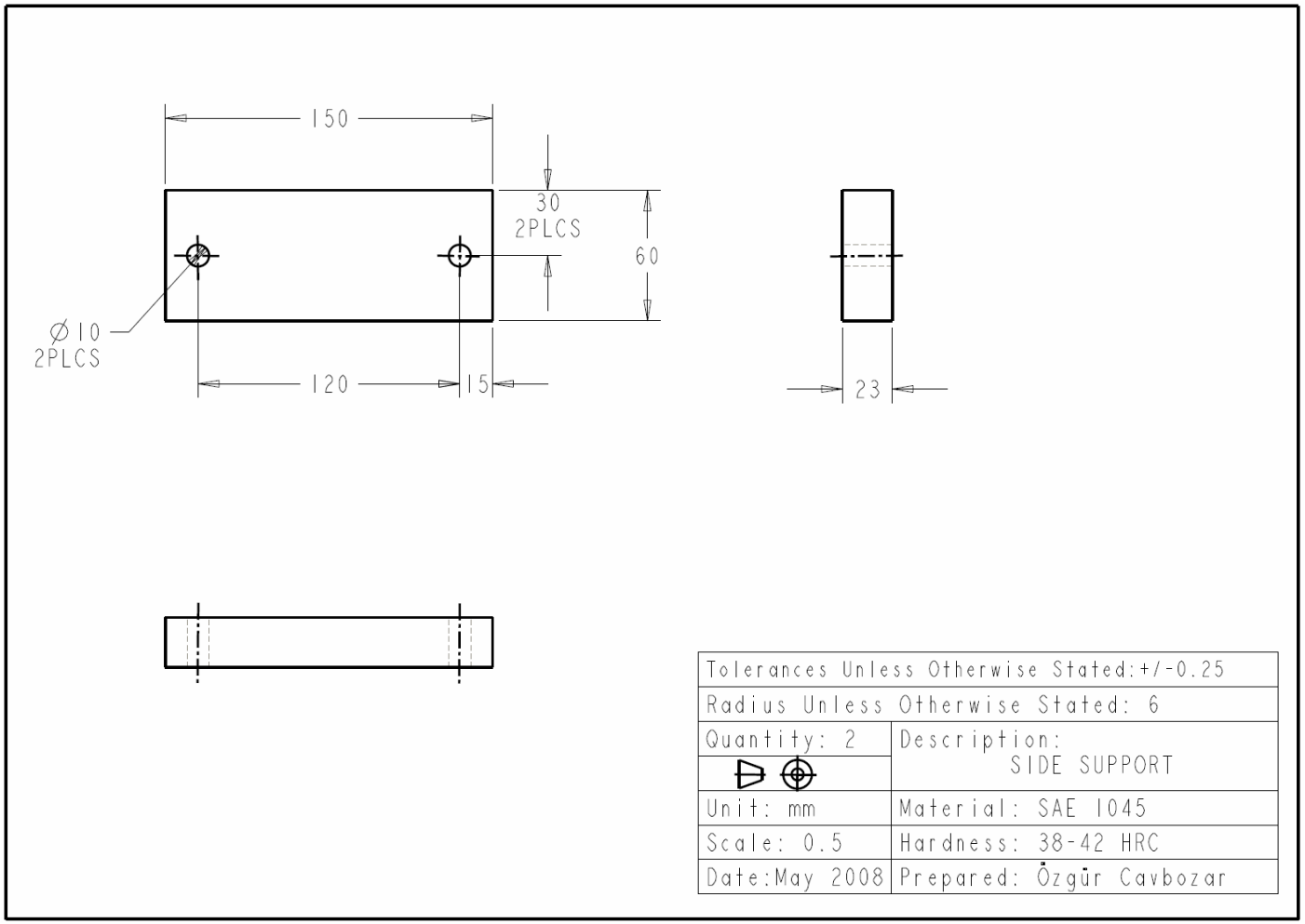

Figure D.14 Technical Drawing of Side Supports of the First Alternative Dimensional Set

APPENDIX E

TECHNICAL DRAWINGS OF THE MODULES BELONGING TO THE SECOND ALTERNATIVE DIMENSIOANAL SET

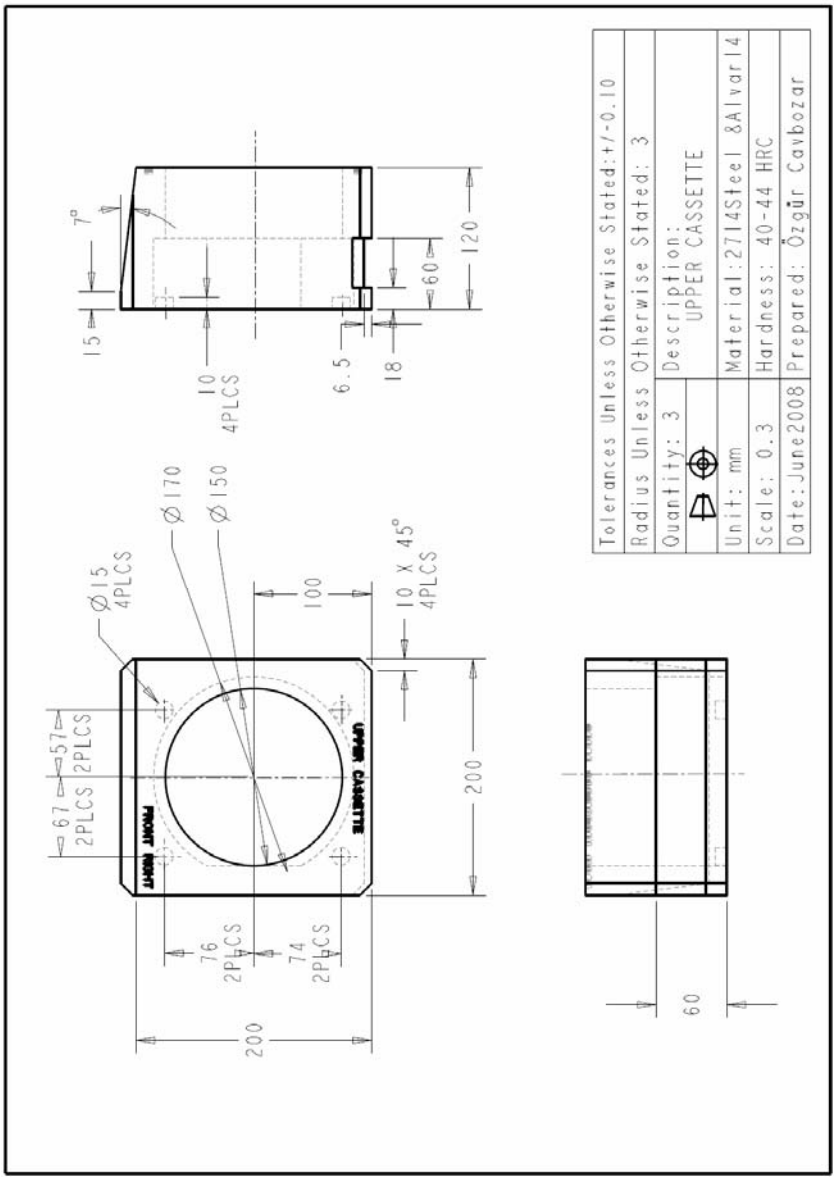

Figure E.1 Technical Drawing of Upper Cassette of the Second Alternative Dimensional Set

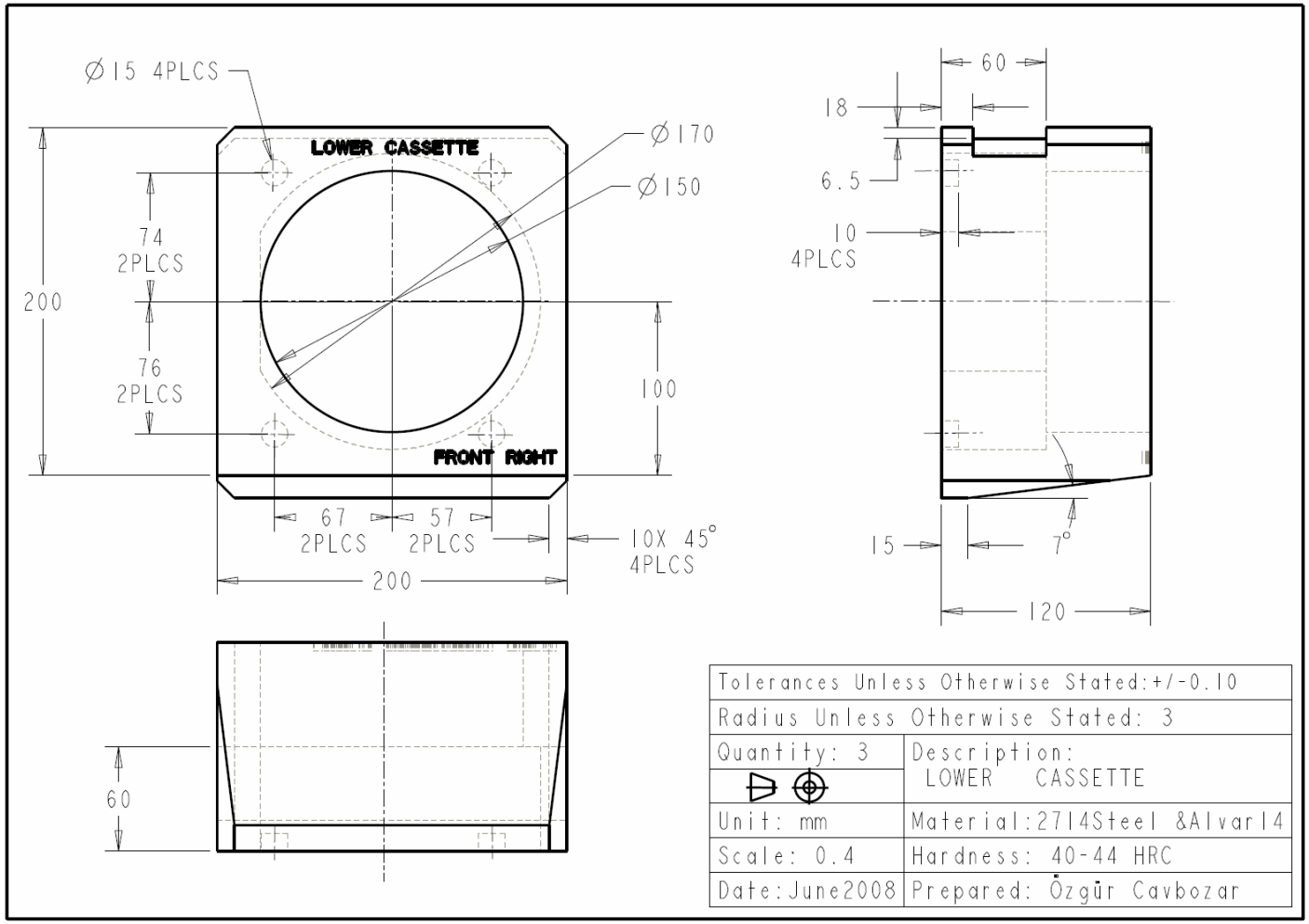

Figure E.2 Technical Drawing of Lower Cassette of the Second Alternative Dimensional Set

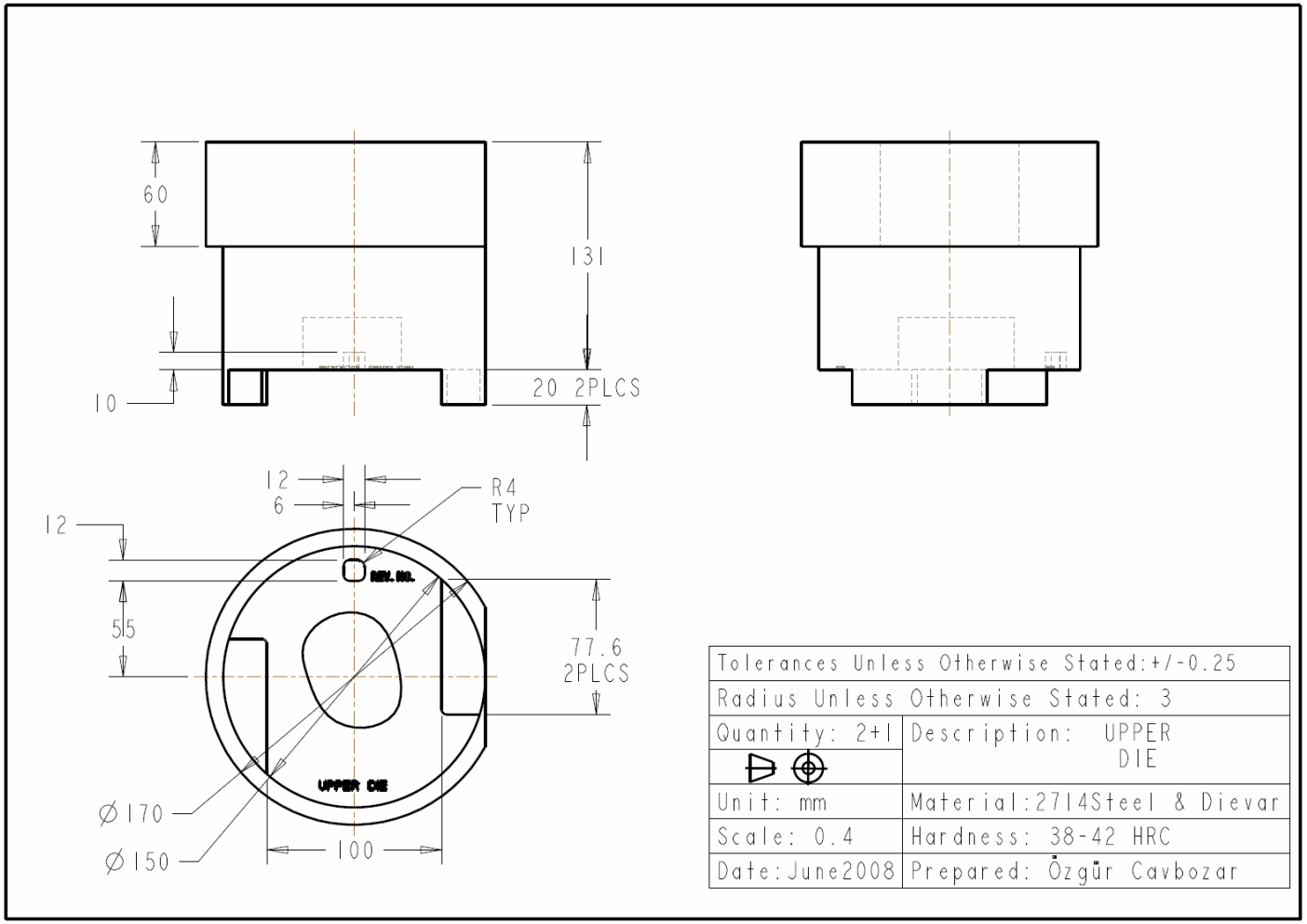

Figure E.3 Technical Drawing of Upper Die of the Second Alternative Dimensional Set

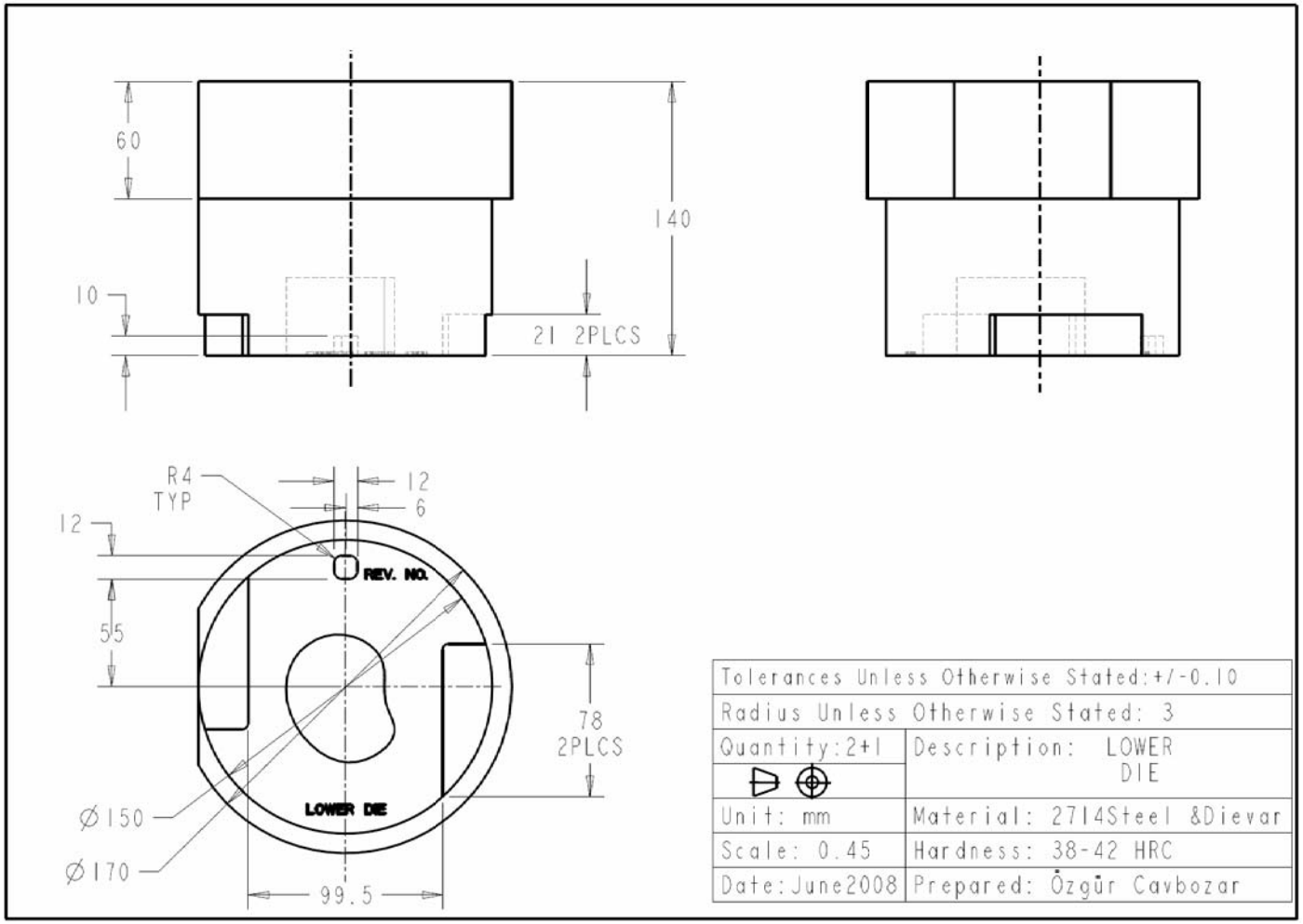

Figure E.4 Technical Drawing of Lower Die of the Second Alternative Dimensional Set

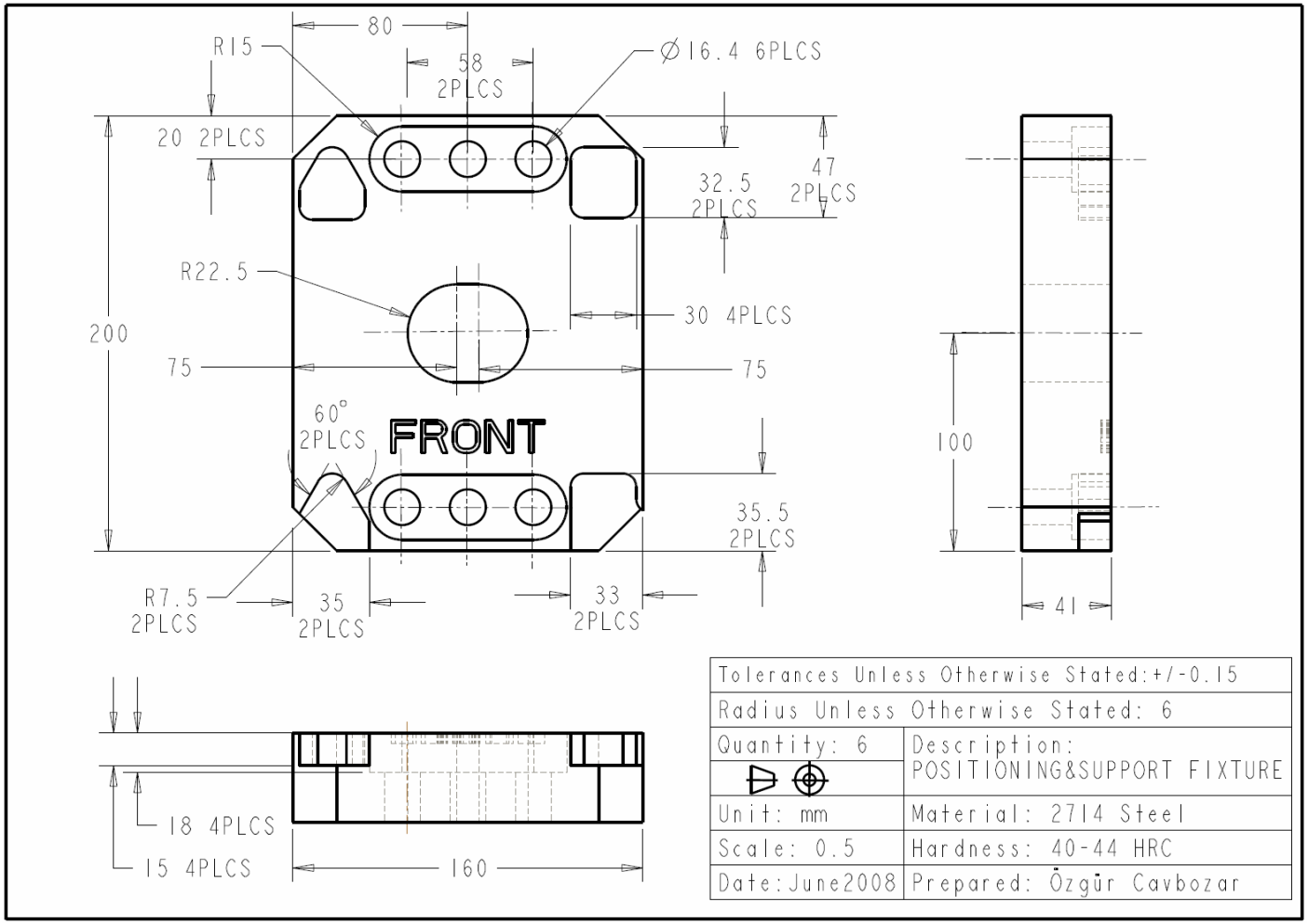

Figure E.5 Technical Drawing of Positioning & Support Fixture of the Second Alternative Dimensional Set

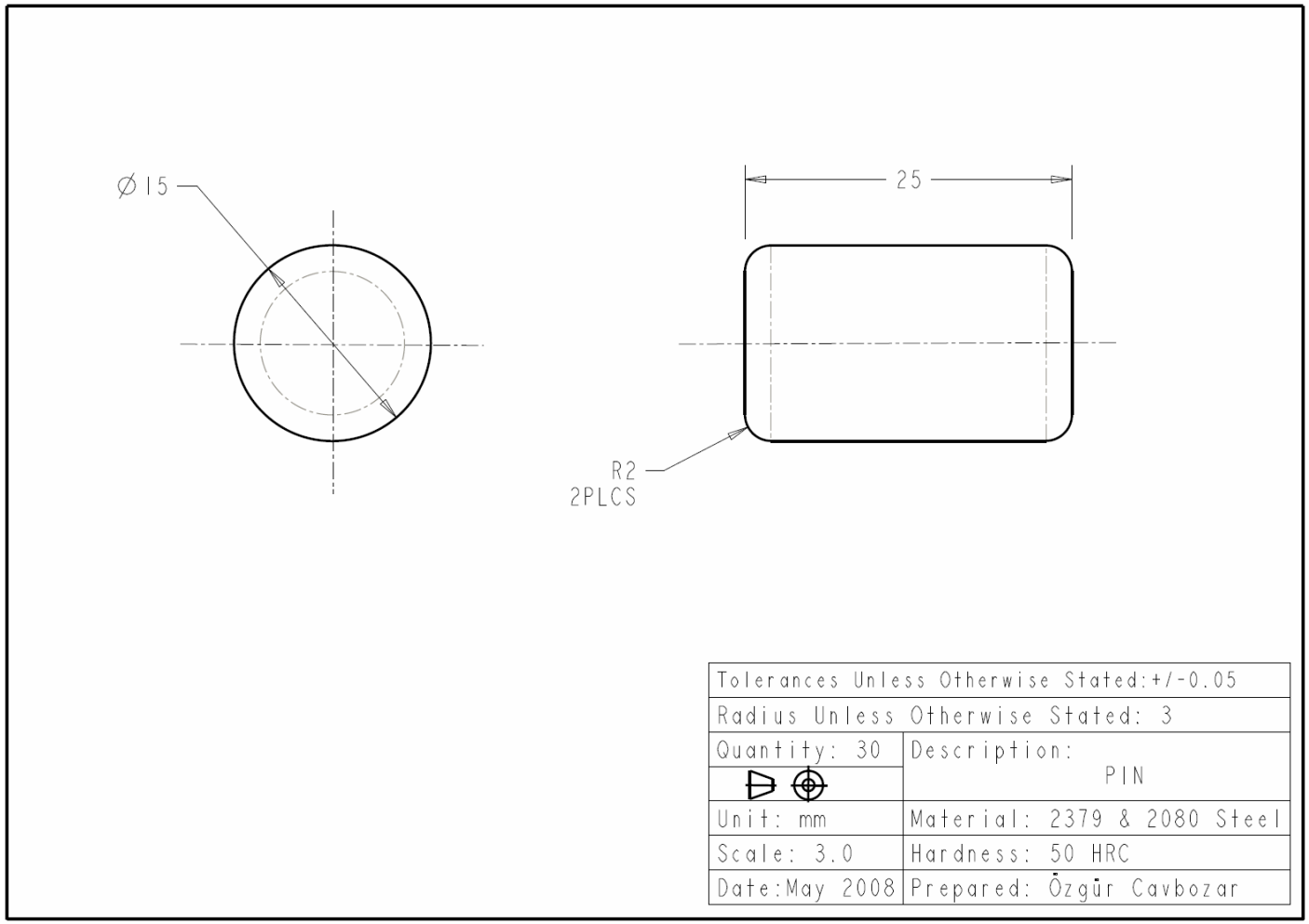

Figure E.6 Technical Drawing of Pins of the Second Alternative Dimensional Set

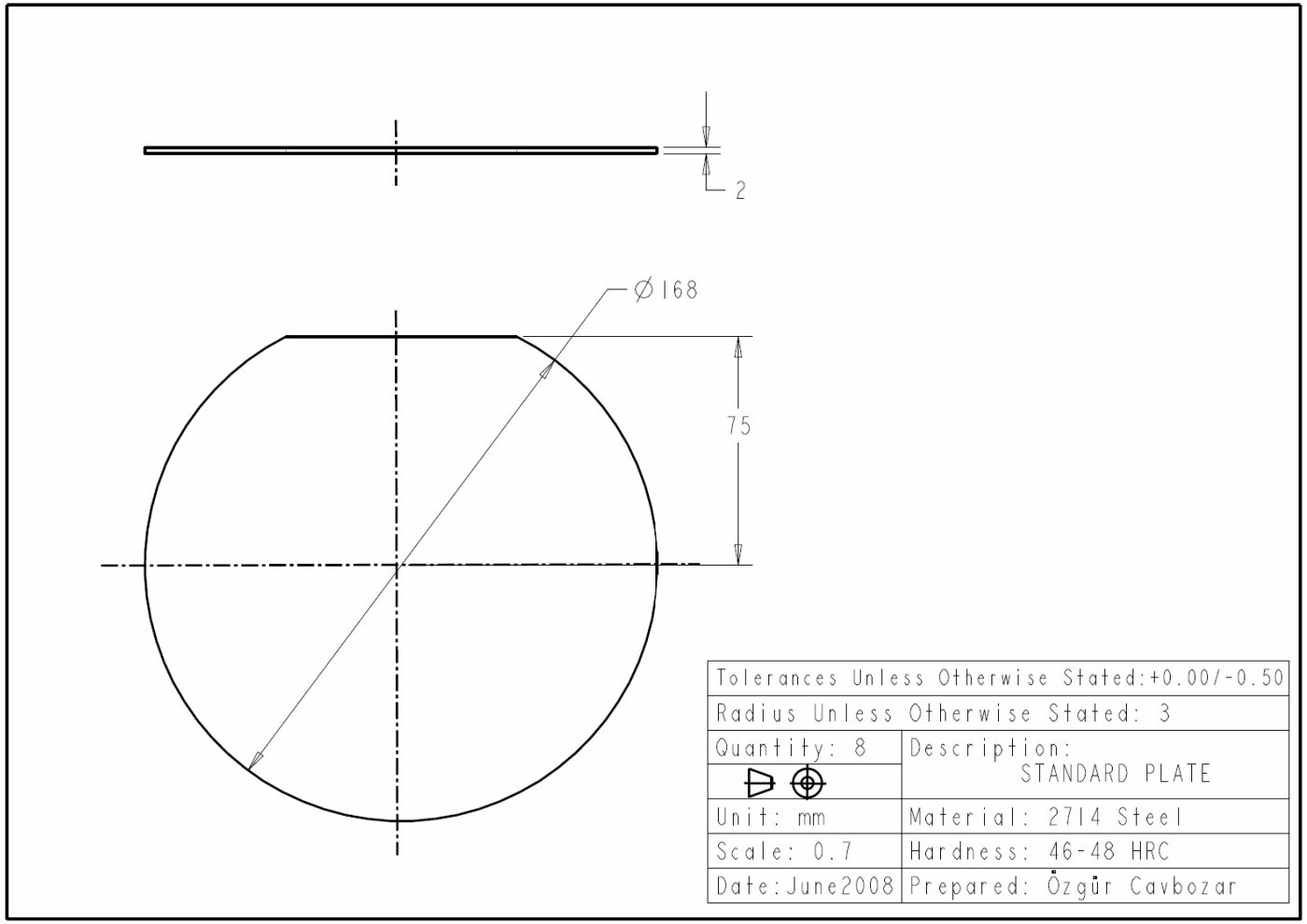

Figure E.7 Technical Drawing of Standard Plates of the Second Alternative Dimensional Set

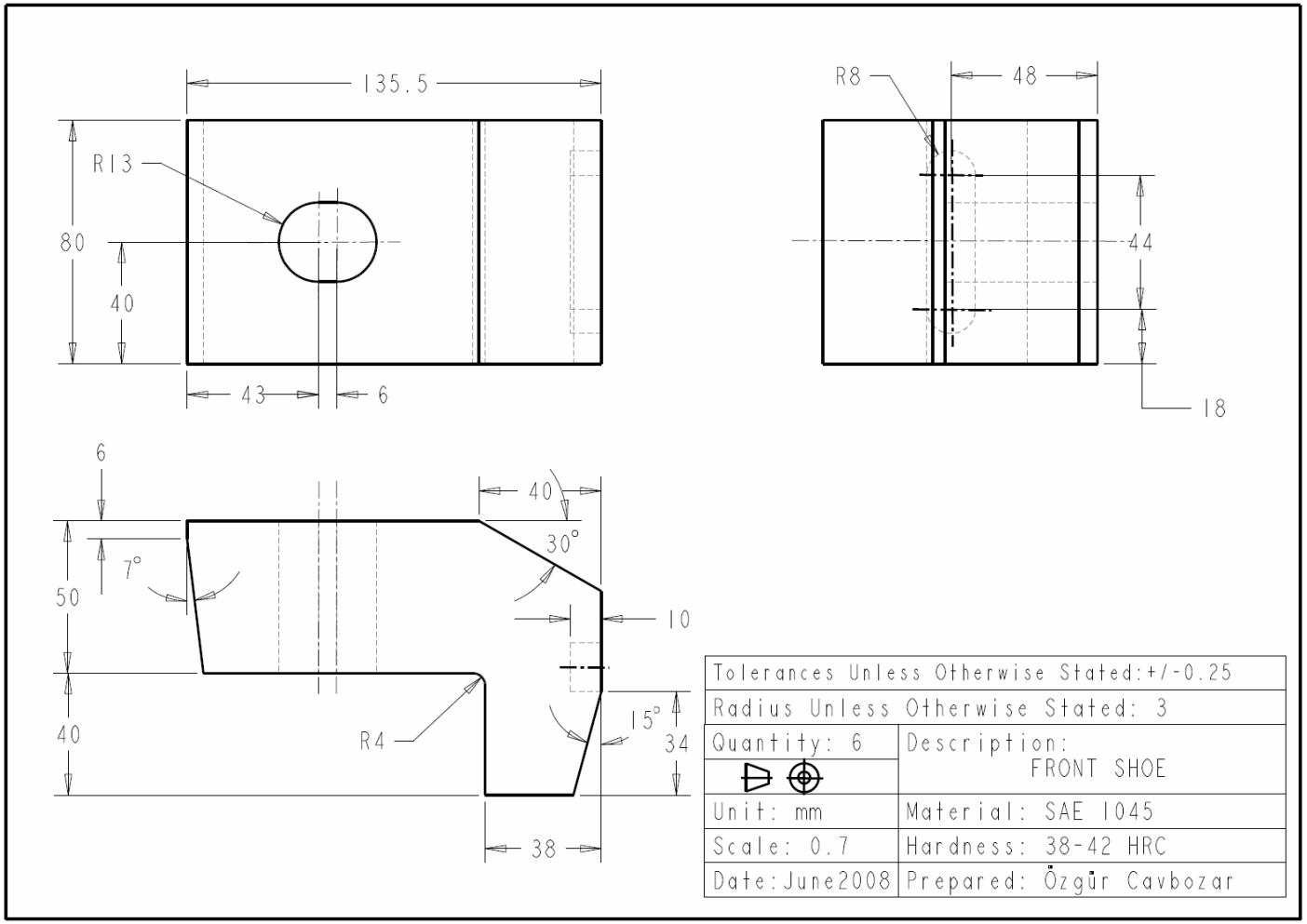

Figure E.8 Technical Drawing of Front Shoes of the Second Alternative Dimensional Set

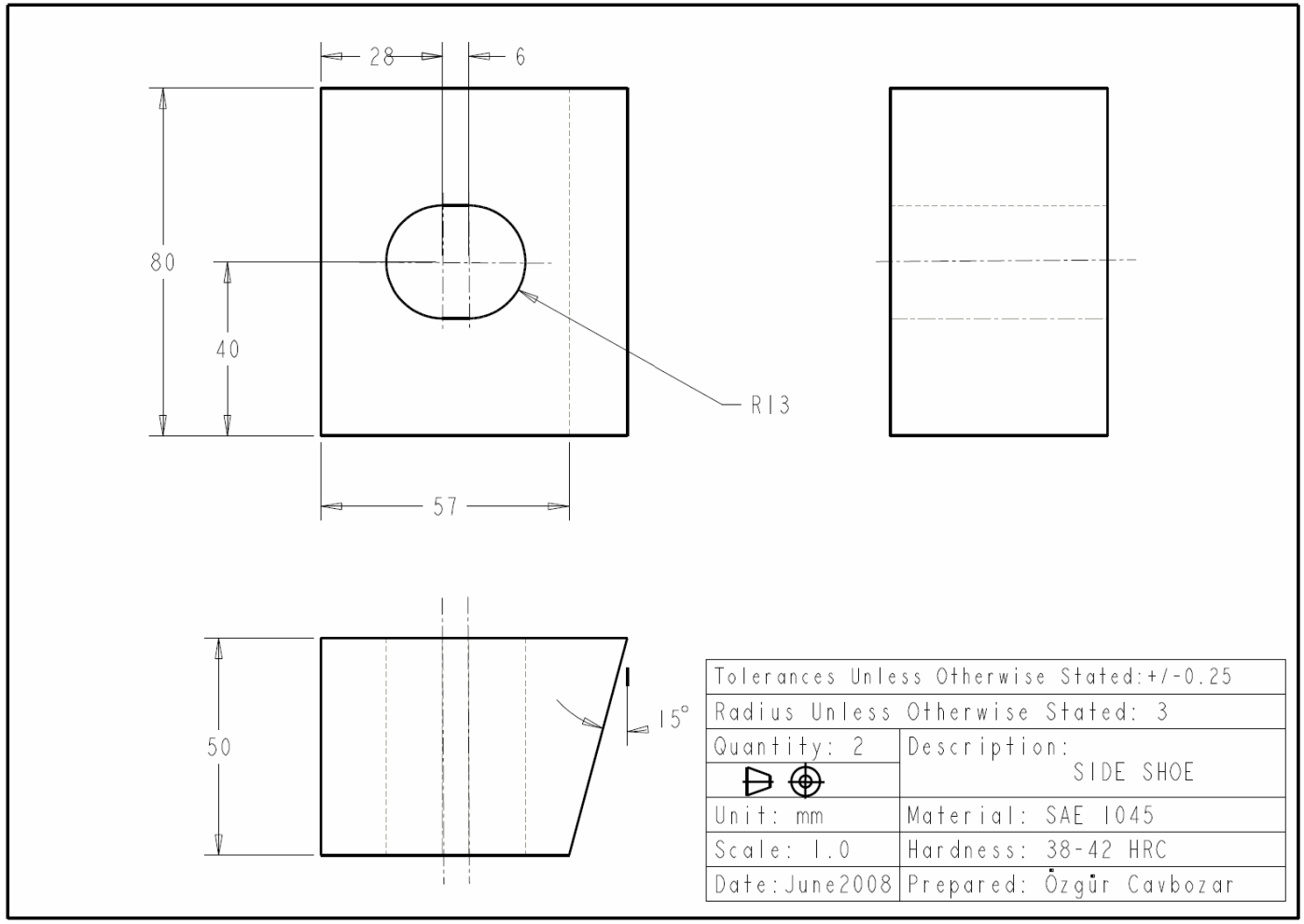

Figure E.9 Technical Drawing of Side Shoes of the Second Alternative Dimensional Set

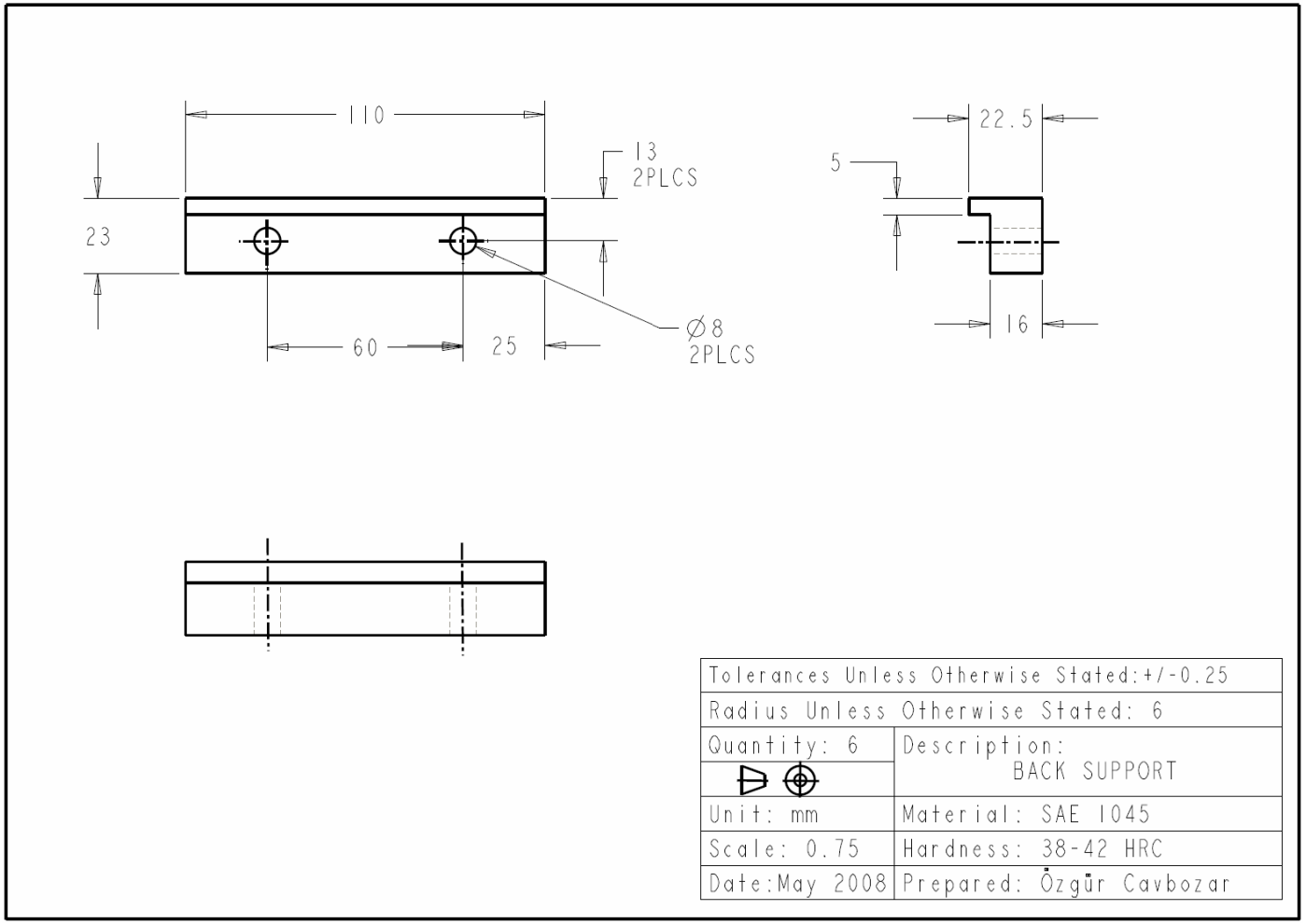

Figure E.10 Technical Drawing of Back Supports of the Second Alternative Dimensional Set

APPENDIX F

TECHNICAL DRAWING OF THE WORK PART OF TESTS

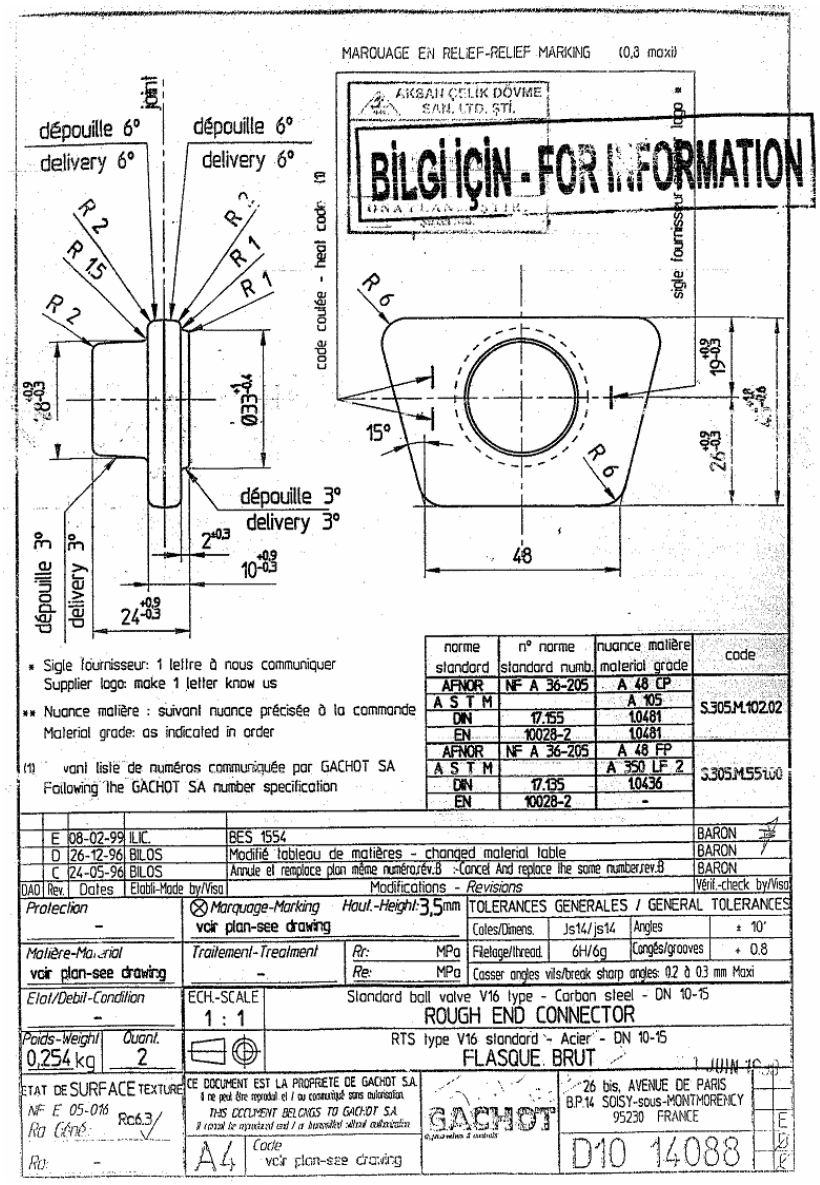

Figure F.1 Technical Drawing of the Work Part of Tests

APPENDIX G

PROCESS CHARTS OF THE PRESENT SYSTEM

Table G.1 Process Chart of Mounting Dies to Cassettes for the Present System

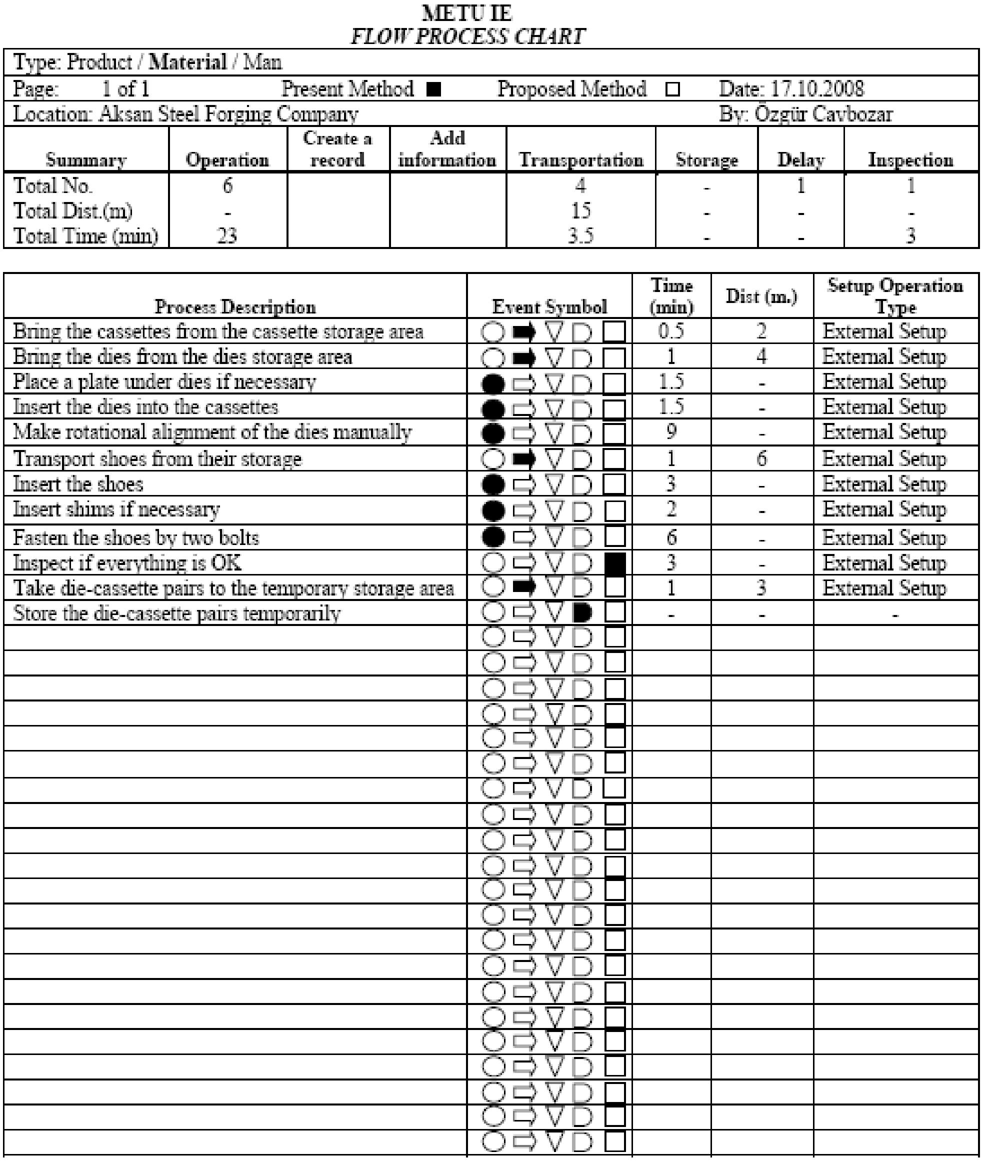

METU IE

FLOW PROCESS CHART

Type: Product / **Material** / Man

Page: 1 of 1 Present Method ■ Proposed Method ☐ Date: 17.10.2008

Location: Aksan Steel Forging Company By: Özgür Cavbozar

Summary	Operation	Create a record	Add information	Transportation	Storage	Delay	Inspection
Total No.	6			4	-	1	1
Total Dist.(m)	-			15	-	-	-
Total Time (min)	23			3.5	-	-	3

Process Description	Event Symbol	Time (min)	Dist (m.)	Setup Operation Type
Bring the cassettes from the cassette storage area	○ ➡ ▽ D ☐	0.5	2	External Setup
Bring the dies from the dies storage area	○ ➡ ▽ D ☐	1	4	External Setup
Place a plate under dies if necessary	● ⇨ ▽ D ☐	1.5	-	External Setup
Insert the dies into the cassettes	● ⇨ ▽ D ☐	1.5	-	External Setup
Make rotational alignment of the dies manually	● ⇨ ▽ D ☐	9	-	External Setup
Transport shoes from their storage	○ ➡ ▽ D ☐	1	6	External Setup
Insert the shoes	● ⇨ ▽ D ☐	3	-	External Setup
Insert shims if necessary	● ⇨ ▽ D ☐	2	-	External Setup
Fasten the shoes by two bolts	● ⇨ ▽ D ☐	6	-	External Setup
Inspect if everything is OK	○ ⇨ ▽ D ■	3	-	External Setup
Take die-cassette pairs to the temporary storage area	○ ➡ ▽ D ☐	1	3	External Setup
Store the die-cassette pairs temporarily	○ ⇨ ▽ ◗ ☐	-	-	-
	○ ⇨ ▽ D ☐			
	○ ⇨ ▽ D ☐			
	○ ⇨ ▽ D ☐			
	○ ⇨ ▽ D ☐			
	○ ⇨ ▽ D ☐			
	○ ⇨ ▽ D ☐			
	○ ⇨ ▽ D ☐			
	○ ⇨ ▽ D ☐			
	○ ⇨ ▽ D ☐			
	○ ⇨ ▽ D ☐			
	○ ⇨ ▽ D ☐			
	○ ⇨ ▽ D ☐			
	○ ⇨ ▽ D ☐			
	○ ⇨ ▽ D ☐			
	○ ⇨ ▽ D ☐			
	○ ⇨ ▽ D ☐			
	○ ⇨ ▽ D ☐			
	○ ⇨ ▽ D ☐			
	○ ⇨ ▽ D ☐			
	○ ⇨ ▽ D ☐			
	○ ⇨ ▽ D ☐			

Table G.2 Process Chart of Dismounting Die-Cassette Pairs from Die Holders for the Present System

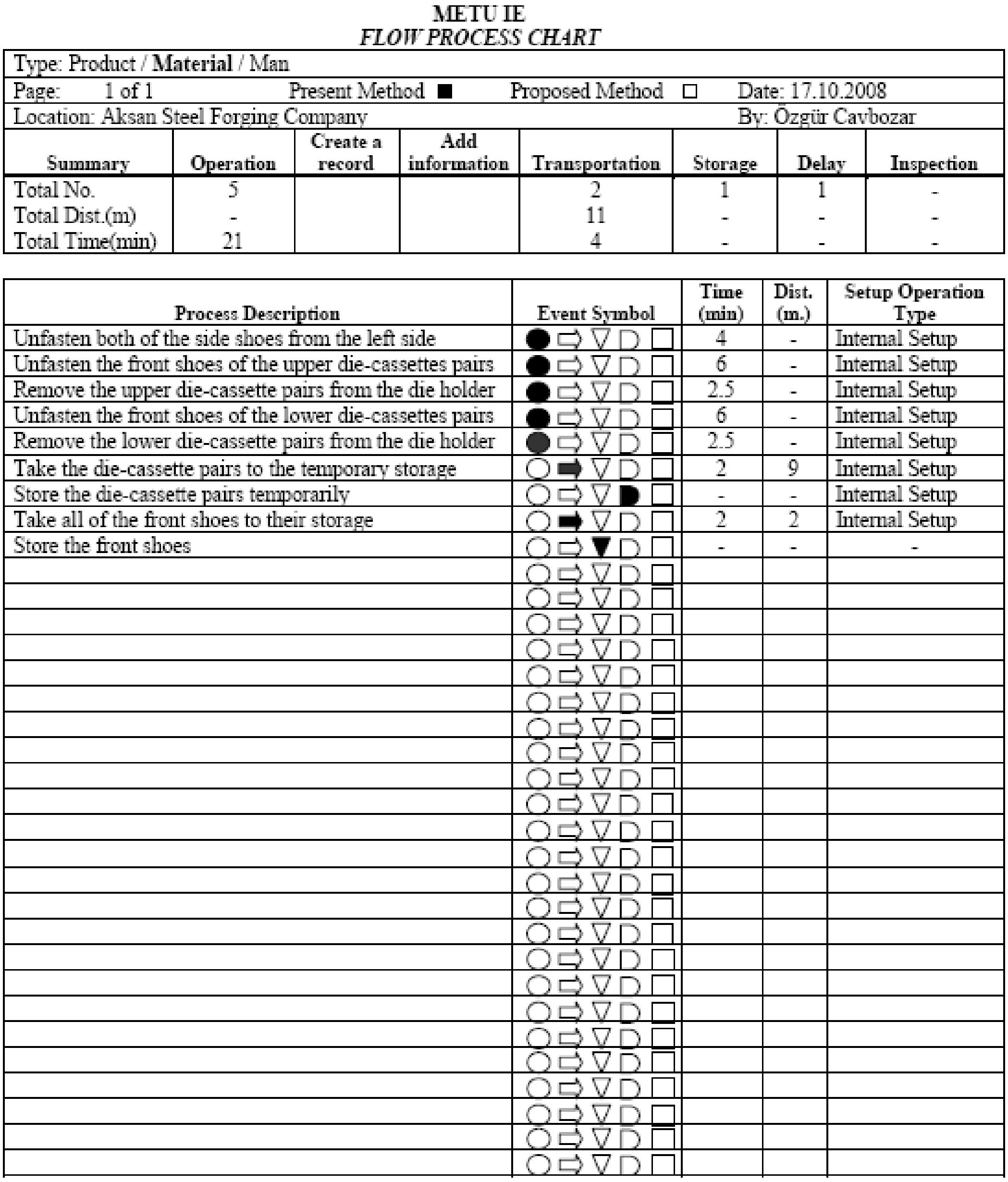

METU IE
FLOW PROCESS CHART

Type: Product / **Material** / Man		
Page: 1 of 1	Present Method ■	Proposed Method ☐ Date: 17.10.2008
Location: Aksan Steel Forging Company		By: Özgür Cavbozar

Summary	Operation	Create a record	Add information	Transportation	Storage	Delay	Inspection
Total No.	5			2	1	1	-
Total Dist.(m)	-			11	-	-	-
Total Time(min)	21			4	-	-	-

Process Description	Event Symbol	Time (min)	Dist. (m.)	Setup Operation Type
Unfasten both of the side shoes from the left side	● ⇨ ▽ D □	4	-	Internal Setup
Unfasten the front shoes of the upper die-cassettes pairs	● ⇨ ▽ D □	6	-	Internal Setup
Remove the upper die-cassette pairs from the die holder	● ⇨ ▽ D □	2.5	-	Internal Setup
Unfasten the front shoes of the lower die-cassettes pairs	● ⇨ ▽ D □	6	-	Internal Setup
Remove the lower die-cassette pairs from the die holder	● ⇨ ▽ D □	2.5	-	Internal Setup
Take the die-cassette pairs to the temporary storage	○ ➡ ▽ D □	2	9	Internal Setup
Store the die-cassette pairs temporarily	○ ⇨ ▽ ◗ □	-	-	Internal Setup
Take all of the front shoes to their storage	○ ➡ ▽ D □	2	2	Internal Setup
Store the front shoes	○ ⇨ ▼ D □	-	-	-
	○ ⇨ ▽ D □			
	○ ⇨ ▽ D □			
	○ ⇨ ▽ D □			
	○ ⇨ ▽ D □			
	○ ⇨ ▽ D □			
	○ ⇨ ▽ D □			
	○ ⇨ ▽ D □			
	○ ⇨ ▽ D □			
	○ ⇨ ▽ D □			
	○ ⇨ ▽ D □			
	○ ⇨ ▽ D □			
	○ ⇨ ▽ D □			
	○ ⇨ ▽ D □			
	○ ⇨ ▽ D □			
	○ ⇨ ▽ D □			
	○ ⇨ ▽ D □			
	○ ⇨ ▽ D □			
	○ ⇨ ▽ D □			
	○ ⇨ ▽ D □			
	○ ⇨ ▽ D □			
	○ ⇨ ▽ D □			
	○ ⇨ ▽ D □			
	○ ⇨ ▽ D □			
	○ ⇨ ▽ D □			

Table G.3 Process Chart of Mounting Die-Cassette Pairs to Die Holders for the Present System

METU IE
FLOW PROCESS CHART

Type: Product / **Material** / Man							
Page: 1 of 1	Present Method ■		Proposed Method □		Date: 17.10.2008		
Location: Aksan Steel Forging Company					By: Özgür Cavbozar		
Summary	**Operation**	**Create a record**	**Add information**	**Transportation**	**Storage**	**Delay**	**Inspection**
Total No.	8			4	-	1	1
Total Dist. (m)	-			11	-	-	-
Total Time (min)	99			30	-	60	6

Process Description	**Event Symbol**	**Time (min)**	**Dist. (m.)**	**Setup Operation Type**
Bring the die-cassette pairs to the forging area	○ ➡ ▽ D □	2	9	Internal Setup
Bring & place the upper die-cassette pairs on the upper die holder	○ ➡ ▽ D □	20	-	Internal Setup
Bring the front shoes from the storage	○ ➡ ▽ D □	2	2	Internal Setup
Insert plates btw. the front shoes and upper cassettes if necessary	● ⇨ ▽ D □	2.5	-	Internal Setup
Fasten the upper die-cassette pairs by the front shoes	● ⇨ ▽ D □	8.5	-	Internal Setup
Bring & place the lower die-cassette pairs on the lower die holder	○ ➡ ▽ D □	6	-	Internal Setup
Insert plates btw. the front shoes and lower cassettes if necessary	● ⇨ ▽ D □	2.5	-	Internal Setup
Fasten the upper die-cassette pairs by the front shoes	● ⇨ ▽ D □	8.5	-	Internal Setup
Insert plates in front of the side shoes if necessary	● ⇨ ▽ D □	3	-	Internal Setup
Fasten all of the die-cassette pairs by the side shoes	● ⇨ ▽ D □	4	-	Internal Setup
Make sure that all dies are in desired position	○ ⇨ ▽ D ■	6	-	Internal Setup
Make adjustments for perfect alignment of dies	● ⇨ ▽ D □	70	-	Internal Setup
Preheat the dies	○ ⇨ ▽ ● □	60	-	Internal Setup
Activate the press	● ⇨ ▽ D □	-	-	Internal Setup
	○ ⇨ ▽ D □			
	○ ⇨ ▽ D □			
	○ ⇨ ▽ D □			
	○ ⇨ ▽ D □			
	○ ⇨ ▽ D □			
	○ ⇨ ▽ D □			
	○ ⇨ ▽ D □			
	○ ⇨ ▽ D □			
	○ ⇨ ▽ D □			
	○ ⇨ ▽ D □			
	○ ⇨ ▽ D □			
	○ ⇨ ▽ D □			
	○ ⇨ ▽ D □			
	○ ⇨ ▽ D □			
	○ ⇨ ▽ D □			
	○ ⇨ ▽ D □			
	○ ⇨ ▽ D □			
	○ ⇨ ▽ D □			

Table G.4 Process Chart of Dismounting Dies from Cassettes for the Present System

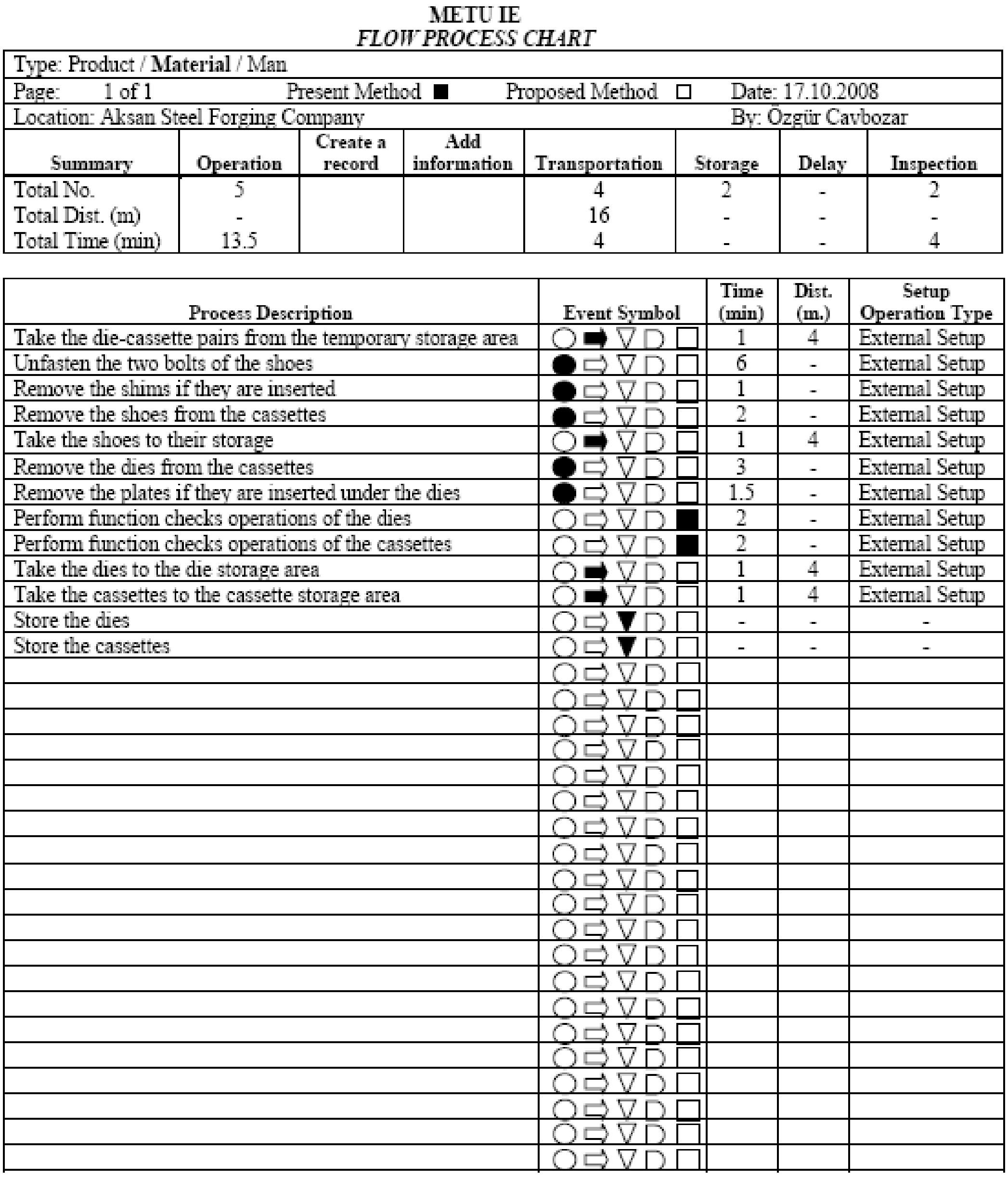

METU IE
FLOW PROCESS CHART

Type: Product / **Material** / Man
Page: 1 of 1 Present Method ■ Proposed Method ☐ Date: 17.10.2008
Location: Aksan Steel Forging Company By: Özgür Cavbozar

Summary	Operation	Create a record	Add information	Transportation	Storage	Delay	Inspection
Total No.	5			4	2	-	2
Total Dist. (m)	-			16	-	-	-
Total Time (min)	13.5			4	-	-	4

Process Description	Event Symbol	Time (min)	Dist. (m.)	Setup Operation Type
Take the die-cassette pairs from the temporary storage area	○ ➡ ▽ D ☐	1	4	External Setup
Unfasten the two bolts of the shoes	● ⇨ ▽ D ☐	6	-	External Setup
Remove the shims if they are inserted	● ⇨ ▽ D ☐	1	-	External Setup
Remove the shoes from the cassettes	● ⇨ ▽ D ☐	2	-	External Setup
Take the shoes to their storage	○ ➡ ▽ D ☐	1	4	External Setup
Remove the dies from the cassettes	● ⇨ ▽ D ☐	3	-	External Setup
Remove the plates if they are inserted under the dies	● ⇨ ▽ D ☐	1.5	-	External Setup
Perform function checks operations of the dies	○ ⇨ ▽ D ■	2	-	External Setup
Perform function checks operations of the cassettes	○ ⇨ ▽ D ■	2	-	External Setup
Take the dies to the die storage area	○ ➡ ▽ D ☐	1	4	External Setup
Take the cassettes to the cassette storage area	○ ➡ ▽ D ☐	1	4	External Setup
Store the dies	○ ⇨ ▼ D ☐	-	-	-
Store the cassettes	○ ⇨ ▼ D ☐	-	-	-
	○ ⇨ ▽ D ☐			
	○ ⇨ ▽ D ☐			
	○ ⇨ ▽ D ☐			
	○ ⇨ ▽ D ☐			
	○ ⇨ ▽ D ☐			
	○ ⇨ ▽ D ☐			
	○ ⇨ ▽ D ☐			
	○ ⇨ ▽ D ☐			
	○ ⇨ ▽ D ☐			
	○ ⇨ ▽ D ☐			
	○ ⇨ ▽ D ☐			
	○ ⇨ ▽ D ☐			
	○ ⇨ ▽ D ☐			
	○ ⇨ ▽ D ☐			
	○ ⇨ ▽ D ☐			
	○ ⇨ ▽ D ☐			
	○ ⇨ ▽ D ☐			
	○ ⇨ ▽ D ☐			
	○ ⇨ ▽ D ☐			
	○ ⇨ ▽ D ☐			

APPENDIX H

PROCESS CHARTS OF THE PROPOSED SYSTEM

Table H.1 Process Chart of Mounting Dies to Cassettes for the Proposed System

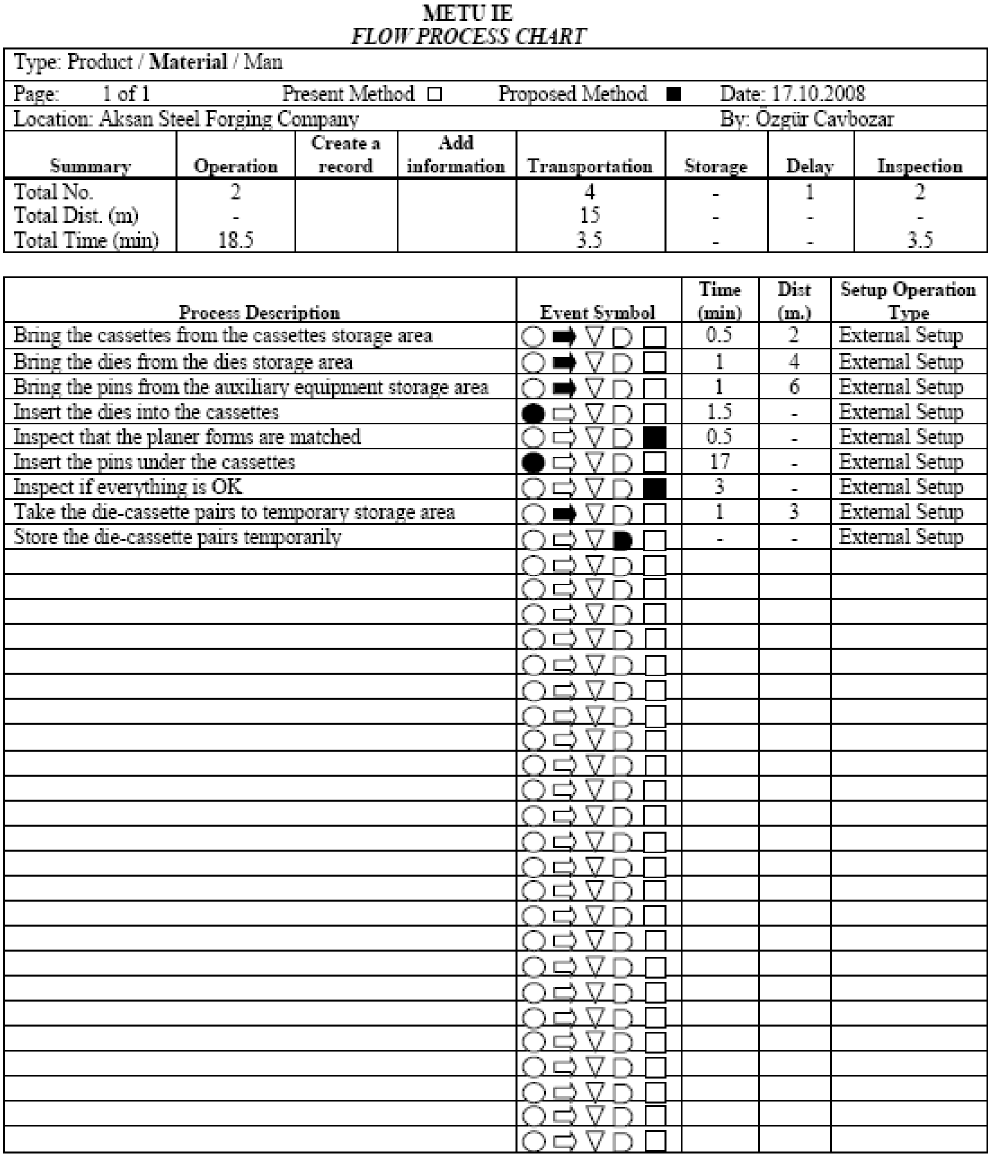

METU IE

FLOW PROCESS CHART

Type: Product / **Material** / Man

Page: 1 of 1 Present Method ☐ Proposed Method ■ Date: 17.10.2008

Location: Aksan Steel Forging Company By: Özgür Cavbozar

Summary	**Operation**	**Create a record**	**Add information**	**Transportation**	**Storage**	**Delay**	**Inspection**
Total No.	2			4	-	1	2
Total Dist. (m)	-			15	-	-	-
Total Time (min)	18.5			3.5	-	-	3.5

Process Description	**Event Symbol**	**Time (min)**	**Dist (m.)**	**Setup Operation Type**
Bring the cassettes from the cassettes storage area	○ ➡ ▽ D ☐	0.5	2	External Setup
Bring the dies from the dies storage area	○ ➡ ▽ D ☐	1	4	External Setup
Bring the pins from the auxiliary equipment storage area	○ ➡ ▽ D ☐	1	6	External Setup
Insert the dies into the cassettes	● ⇨ ▽ D ☐	1.5	-	External Setup
Inspect that the planer forms are matched	○ ⇨ ▽ D ■	0.5	-	External Setup
Insert the pins under the cassettes	● ⇨ ▽ D ☐	17	-	External Setup
Inspect if everything is OK	○ ⇨ ▽ D ■	3	-	External Setup
Take the die-cassette pairs to temporary storage area	○ ➡ ▽ D ☐	1	3	External Setup
Store the die-cassette pairs temporarily	○ ⇨ ▽ ◗ ☐	-	-	External Setup
	○ ⇨ ▽ D ☐			
	○ ⇨ ▽ D ☐			
	○ ⇨ ▽ D ☐			
	○ ⇨ ▽ D ☐			
	○ ⇨ ▽ D ☐			
	○ ⇨ ▽ D ☐			
	○ ⇨ ▽ D ☐			
	○ ⇨ ▽ D ☐			
	○ ⇨ ▽ D ☐			
	○ ⇨ ▽ D ☐			
	○ ⇨ ▽ D ☐			
	○ ⇨ ▽ D ☐			
	○ ⇨ ▽ D ☐			
	○ ⇨ ▽ D ☐			
	○ ⇨ ▽ D ☐			
	○ ⇨ ▽ D ☐			
	○ ⇨ ▽ D ☐			
	○ ⇨ ▽ D ☐			
	○ ⇨ ▽ D ☐			
	○ ⇨ ▽ D ☐			
	○ ⇨ ▽ D ☐			
	○ ⇨ ▽ D ☐			
	○ ⇨ ▽ D ☐			
	○ ⇨ ▽ D ☐			

Table H.2 Process Chart of Dismounting Die-Cassette Pairs from Die Holders for the Proposed System

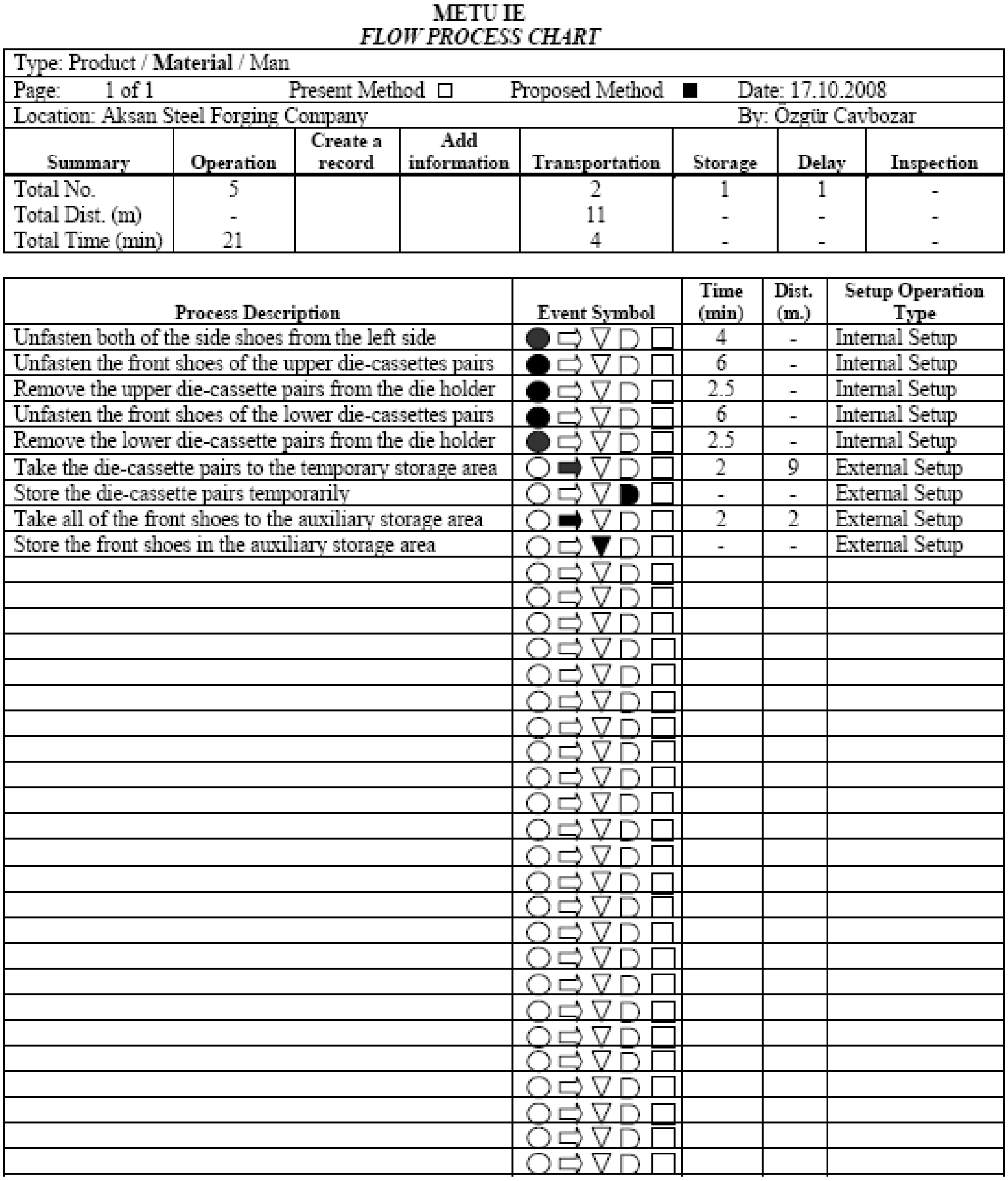

METU IE

FLOW PROCESS CHART

Type: Product / **Material** / Man							
Page: 1 of 1		Present Method ☐		Proposed Method ■		Date: 17.10.2008	
Location: Aksan Steel Forging Company						By: Özgür Cavbozar	
Summary	**Operation**	**Create a record**	**Add information**	**Transportation**	**Storage**	**Delay**	**Inspection**
Total No.	5			2	1	1	-
Total Dist. (m)	-			11	-	-	-
Total Time (min)	21			4	-	-	-

Process Description	Event Symbol	Time (min)	Dist. (m.)	Setup Operation Type
Unfasten both of the side shoes from the left side	● ⇨ ▽ D ☐	4	-	Internal Setup
Unfasten the front shoes of the upper die-cassettes pairs	● ⇨ ▽ D ☐	6	-	Internal Setup
Remove the upper die-cassette pairs from the die holder	● ⇨ ▽ D ☐	2.5	-	Internal Setup
Unfasten the front shoes of the lower die-cassettes pairs	● ⇨ ▽ D ☐	6	-	Internal Setup
Remove the lower die-cassette pairs from the die holder	● ⇨ ▽ D ☐	2.5	-	Internal Setup
Take the die-cassette pairs to the temporary storage area	○ ➡ ▽ D ☐	2	9	External Setup
Store the die-cassette pairs temporarily	○ ⇨ ▽ ◗ ☐	-	-	External Setup
Take all of the front shoes to the auxiliary storage area	○ ➡ ▽ D ☐	2	2	External Setup
Store the front shoes in the auxiliary storage area	○ ⇨ ▼ D ☐	-	-	External Setup
	○ ⇨ ▽ D ☐			
	○ ⇨ ▽ D ☐			
	○ ⇨ ▽ D ☐			
	○ ⇨ ▽ D ☐			
	○ ⇨ ▽ D ☐			
	○ ⇨ ▽ D ☐			
	○ ⇨ ▽ D ☐			
	○ ⇨ ▽ D ☐			
	○ ⇨ ▽ D ☐			
	○ ⇨ ▽ D ☐			
	○ ⇨ ▽ D ☐			
	○ ⇨ ▽ D ☐			
	○ ⇨ ▽ D ☐			
	○ ⇨ ▽ D ☐			
	○ ⇨ ▽ D ☐			
	○ ⇨ ▽ D ☐			
	○ ⇨ ▽ D ☐			
	○ ⇨ ▽ D ☐			
	○ ⇨ ▽ D ☐			
	○ ⇨ ▽ D ☐			
	○ ⇨ ▽ D ☐			
	○ ⇨ ▽ D ☐			
	○ ⇨ ▽ D ☐			
	○ ⇨ ▽ D ☐			

Table H.3 Process Chart of Mounting Die-Cassette Pairs to Die Holders for the Proposed System

METU IE
FLOW PROCESS CHART

Type: Product / **Material** / Man							
Page: 1 of 1	Present Method ☐		Proposed Method ■		Date: 17.10 2008		
Location: Aksan Steel Forging Company					By: Özgür Cavbozar		
Summary	**Operation**	**Create a record**	**Add information**	**Transportation**	**Storage**	**Delay**	**Inspection**
Total No.	6			4	-	1	3
Total Dist. (m)	-			11	-	-	-
Total Time (min)	31			28	-	60	7

Process Description	**Event Symbol**	**Time (min)**	**Dist. (m.)**	**Setup Operation Type**
Bring the die-cassette pairs to the forging area	○ ➡ ▽ D ☐	2	9	External Setup
Bring & place the upper die-cassette pairs on the upper die holder	○ ➡ ▽ D ☐	19	-	Internal Setup
Push the upper die-cassette pairs back	● ⇨ ▽ D ☐	6	-	Internal Setup
Make sure that the pins are seated on V-slots on upper side	○ ⇨ ▽ D ■	1	-	Internal Setup
Bring the front shoes from the auxiliary equipment storage area	○ ➡ ▽ D ☐	2	2	External Setup
Fasten the upper die-cassette pairs by the front shoes	● ⇨ ▽ D ☐	8.5	-	Internal Setup
Bring & place the lower die-cassette pairs on the lower die holder	○ ➡ ▽ D ☐	5	-	Internal Setup
Push the lower die-cassette pairs back	● ⇨ ▽ D ☐	2	-	Internal Setup
Make sure that the pins are seated on V-slots on lower side	○ ⇨ ▽ D ■	1	-	Internal Setup
Make sure that all dies are in desired position	○ ⇨ ▽ D ■	5	-	Internal Setup
Fasten the lower die-cassette pairs by the front shoes	● ⇨ ▽ D ☐	8.5		Internal Setup
Fasten all of the die-cassette pairs by the side shoes	● ⇨ ▽ D ☐	4	-	Internal Setup
Preheat the dies	○ ⇨ ▽ ● ☐	60	-	Internal Setup
Activate the press	● ⇨ ▽ D ☐	-	-	Internal Setup
	○ ⇨ ▽ D ☐			
	○ ⇨ ▽ D ☐			
	○ ⇨ ▽ D ☐			
	○ ⇨ ▽ D ☐			
	○ ⇨ ▽ D ☐			
	○ ⇨ ▽ D ☐			
	○ ⇨ ▽ D ☐			
	○ ⇨ ▽ D ☐			
	○ ⇨ ▽ D ☐			
	○ ⇨ ▽ D ☐			
	○ ⇨ ▽ D ☐			
	○ ⇨ ▽ D ☐			
	○ ⇨ ▽ D ☐			
	○ ⇨ ▽ D ☐			
	○ ⇨ ▽ D ☐			
	○ ⇨ ▽ D ☐			
	○ ⇨ ▽ D ☐			
	○ ⇨ ▽ D ☐			
	○ ⇨ ▽ D ☐			

Table H.4 Process Chart of Dismounting Dies from Cassettes for the Proposed System

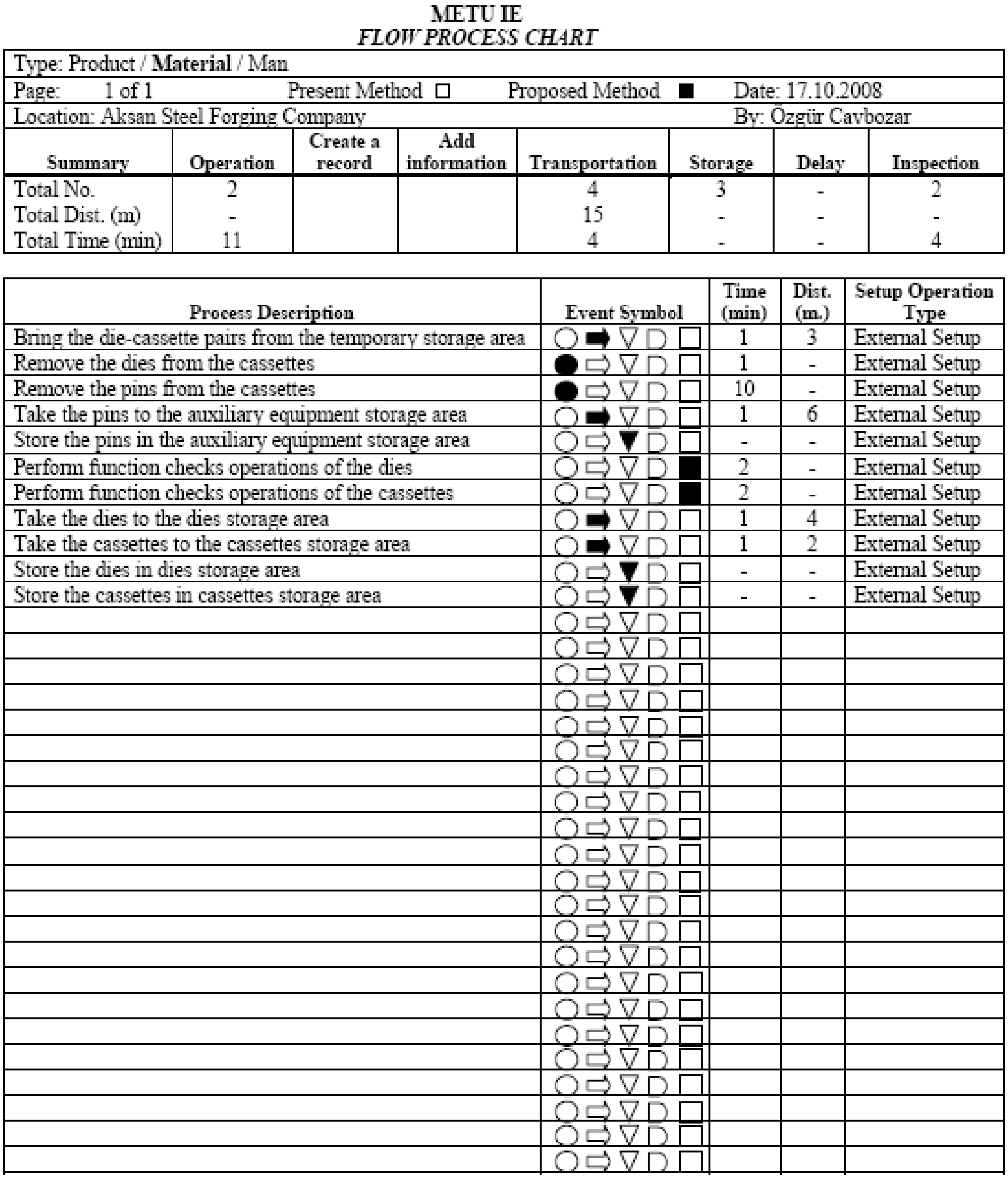

METU IE
FLOW PROCESS CHART

Type: Product / **Material** / Man							
Page: 1 of 1		Present Method ☐		Proposed Method ■		Date: 17.10.2008	
Location: Aksan Steel Forging Company						By: Özgür Cavbozar	
Summary	**Operation**	**Create a record**	**Add information**	**Transportation**	**Storage**	**Delay**	**Inspection**
Total No.	2			4	3	-	2
Total Dist. (m)	-			15	-	-	-
Total Time (min)	11			4	-	-	4

Process Description	**Event Symbol**	**Time (min)**	**Dist. (m.)**	**Setup Operation Type**
Bring the die-cassette pairs from the temporary storage area	○ ➡ ▽ D ☐	1	3	External Setup
Remove the dies from the cassettes	● ⇨ ▽ D ☐	1	-	External Setup
Remove the pins from the cassettes	● ⇨ ▽ D ☐	10	-	External Setup
Take the pins to the auxiliary equipment storage area	○ ➡ ▽ D ☐	1	6	External Setup
Store the pins in the auxiliary equipment storage area	○ ⇨ ▼ D ☐	-	-	External Setup
Perform function checks operations of the dies	○ ⇨ ▽ D ■	2	-	External Setup
Perform function checks operations of the cassettes	○ ⇨ ▽ D ■	2	-	External Setup
Take the dies to the dies storage area	○ ➡ ▽ D ☐	1	4	External Setup
Take the cassettes to the cassettes storage area	○ ➡ ▽ D ☐	1	2	External Setup
Store the dies in dies storage area	○ ⇨ ▼ D ☐	-	-	External Setup
Store the cassettes in cassettes storage area	○ ⇨ ▼ D ☐	-	-	External Setup
	○ ⇨ ▽ D ☐			
	○ ⇨ ▽ D ☐			
	○ ⇨ ▽ D ☐			
	○ ⇨ ▽ D ☐			
	○ ⇨ ▽ D ☐			
	○ ⇨ ▽ D ☐			
	○ ⇨ ▽ D ☐			
	○ ⇨ ▽ D ☐			
	○ ⇨ ▽ D ☐			
	○ ⇨ ▽ D ☐			
	○ ⇨ ▽ D ☐			
	○ ⇨ ▽ D ☐			
	○ ⇨ ▽ D ☐			
	○ ⇨ ▽ D ☐			
	○ ⇨ ▽ D ☐			
	○ ⇨ ▽ D ☐			
	○ ⇨ ▽ D ☐			
	○ ⇨ ▽ D ☐			
	○ ⇨ ▽ D ☐			
	○ ⇨ ▽ D ☐			
	○ ⇨ ▽ D ☐			
	○ ⇨ ▽ D ☐			

APPENDIX I

ACTIVITY CHART

Table I.1 Activity Chart for the Internal Operations of the Proposed System

Activity Description	Chart	Activity Time (min)	Cumulative Time (min)
Unfasten both of the side shoes from left sides		4	4
Unfasten the front shoes of upper die-cassette pairs		6	10
Remove and take away the previous upper die-cassette pairs from the upper die holder		2.5	12.5
Unfasten the front shoes of lower die-cassette pairs		6	18.5
Remove and take away the previous lower die-cassette pairs from the lower die holder		2.5	21
Bring and place the new upper die-cassette pairs on the upper die holder			

Table I.1 Activity Chart for the Internal Operations of the Proposed System (Continued)

Activity Description	Chart	Activity Time (min)	Cumulative Time (min)
Bring and place the new upper die-cassette pairs on the upper die holder		19	40
Push the upper die-cassette pairs back		6	46
Make sure that the pins are gripped by V-slots on upper side		1	47
Fasten the upperdie-cassette pairs by the front shoes		8.5	55.5

Table I.1 Activity Chart for the Internal Operations of the Proposed System (Continued)

Activity Description	Chart	Activity Time (min)	Cumulative Time (min)
Bring and place the new lower die-cassette pairs on the lower die holder		5	60.5
Push the lower die-cassette pairs back		2	62.5
Make sure that the pins are gripped by V-slots on lower side		1	63.5
Make sure that all dies are in desired position		5	68.5
Fasten the die-cassette pairs by the front shoes		8.5	77
Fasten all of the die-cassette pairs by the side shoes		4	81

Table I.1 Activity Chart for the Internal Operations of the Proposed System (Continued)

Activity Description	Chart	Activity Time (min)	Cumulative Time (min)
Preheat the press		60	141
Activate the press		-	141